C:\Users\mpjoh\Johnson Engineering Dropbox\Johnson Engineering Group\Drafting\0093 BlueWaters Companies\01 Turtle Ponds 6th Addition\TPAB_GEN.dwg Layout: G-101 2:19 PM

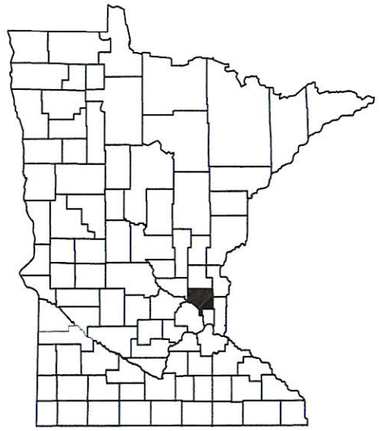

TURTLE PONDS 6TH ADDITION
ST FRANCIS, MN
ANOKA COUNTY

SW 1/4 OF SE 1/4
SECTION 33
T-34-N R-24-W

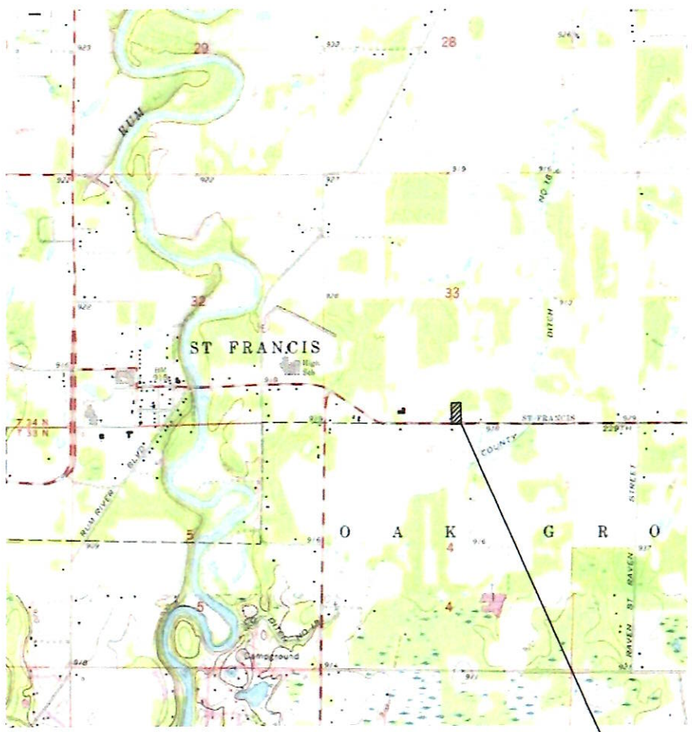

INDEX TO SHEETS

SHEET	G-101	COVER SHEET
SHEET	G-201A	TYPICAL DETAILS SITE
SHEET	G-201B	TYPICAL DETAILS SITE
SHEET	G-202A	TYPICAL DETAILS SANITARY SEWER
SHEET	G-202B	TYPICAL DETAILS SANITARY SEWER
SHEET	G-203A	TYPICAL DETAILS WATERMAIN
SHEET	G-203B	TYPICAL DETAILS WATERMAIN
SHEET	G-204	TYPICAL DETAILS STORM SEWER
SHEET	C-101	EXISTING CONDITIONS PLAN
SHEET	C-102	REMOVAL PLAN
SHEET	C-103	PROPOSED SITE PLAN
SHEET	C-104A	OVERALL SITE GRADING PLAN
SHEET	C-104B	OVERALL SITE GRADING PLAN-ISO GRADING DEPTHS MAP
SHEET	C-105A	OVERALL ROAD PLAN
SHEET	C-105B	ROAD PROFILE PLAN
SHEET	C-105C	ROAD SETBACK TO TURTLE PONDS 4TH ADDITION
SHEET	C-106	SANITARY SEWER PLAN & PROFILE
SHEET	C-107	WATERMAIN PLAN & PROFILE
SHEET	C-108A	STORM SEWER PLAN & PROFILE
SHEET	C-109A	STORM WATER POND PLAN
SHEET	C-109B	STORM WATER POND PROFILES
SHEET	SW-101	SWPPP COVER
SHEET	SW-102	SWPPP NOTES
SHEET	SW-103	SWPPP SITE PLAN
SHEET	SW-104	SWPPP DETAILS
SHEET	SW-105	SWPPP DETAILS
SHEET	L-100	TREE SURVEY
SHEET	L-101	TREE PRESERVATION PLAN
SHEET	L-102	LANDSCAPE PLAN
SHEET	L-103	LANDSCAPE DETAILS

CERTIFICATION SEAL
REGISTERED PROFESSIONAL ENGINEER
REG. NO. 15051
DENNIS JOHNSON
MINNESOTA

I HEREBY CERTIFY THAT THIS PLAN, SPECIFICATION, OR REPORT WAS PREPARED BE ME OR UNDER MY DIRECT SUPERVISION AND THAT I AM A DULY LICENSED PROFESSIONAL ENGINEER UNDER THE LAWS OF THE STATE OF MINNESOTA.

5/18/2023
DENNIS J. JOHNSON

LICENSE NUMBER 15051
LICENSE RENEWAL DATE IS JUNE 2024

REV	REVISION DESCRIPTION	DWN	APP	REV DATE

JOHNSON ENGINEERING GROUP
PO Box 384
Windom, MN 56101
(507) 832-8450

DWN BY	CHK'D	APP'D
MPJ	MPJ	DJJ

DWG DATE 5/18/2023
SCALE N/A

PROJECT: Turtle Ponds 6th Addition
CLIENT: BlueWaters Companies, Inc
17029 Vickers Street NE
Ham Lake, MN 55304

SHEET TITLE: Cover Page

PROJECT NO.	SHEET NO.	REV NO.
0093-01	G-101	

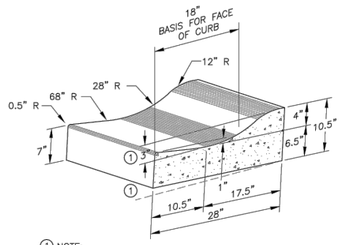

① NOTE:
CURB SHALL BE PLACED IN A TILTED POSITION AS SUCH TO PROVIDE A 3" DEPTH FROM THE TOP OF CURB TO THE FLOWLINE WHEN MEASURED ON A LEVEL PLANE.

MOUNTABLE CONCRETE CURB & GUTTER

NOT TO SCALE

Y:\STFR\2013 Details\STFR_7-006.dwg

BOLTON & MENK, INC. Consulting Engineers & Surveyors — MANKATO, MN · FARMONT, MN · SLEEPY EYE, MN · BURNSVILLE, MN · WILLMAR, MN · CHASKA, MN · RAMSEY, MN · MAPLEWOOD, MN · BAXTER, MN · ROCHESTER, MN · AMES, IA · SPENCER, IA

MOUNTABLE CONCRETE CURB & GUTTER | City of St. Francis | DATE: 07/2013 | STD. DETAIL 7-006

NOTE:
SURMOUNTABLE CURB & GUTTER TO BE FORMED INTO A B618 TYPE AT CATCHBASIN

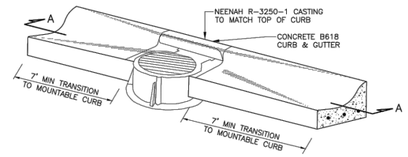

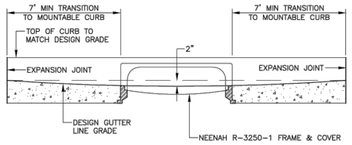

SECTION A-A

CATCHBASIN – CURB DETAIL FOR R-3250-1 IN MOUNTABLE CURB

NOT TO SCALE

Y:\STFR\2013 Details\STFR_7-010.dwg

BOLTON & MENK, INC. Consulting Engineers & Surveyors — MANKATO, MN · FARMONT, MN · SLEEPY EYE, MN · BURNSVILLE, MN · WILLMAR, MN · CHASKA, MN · RAMSEY, MN · MAPLEWOOD, MN · BAXTER, MN · ROCHESTER, MN · AMES, IA · SPENCER, IA

CATCHBASIN–CURB DETAIL FOR R-3250-1 IN MOUNTABLE CURB | City of St. Francis | DATE: 07/2013 | STD. DETAIL 7-010

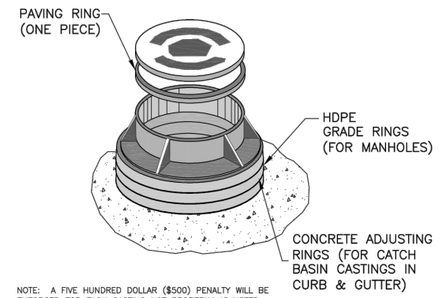

NOTE: A FIVE HUNDRED DOLLAR ($500) PENALTY WILL BE ENFORCED FOR EACH CASTING NOT PROPERLY ADJUSTED REQUIRING A PATCH IN THE BITUMINOUS WEARING COURSE.

Y:\STFR\2013 Details\STFR_7-500.dwg

BOLTON & MENK, INC. Consulting Engineers & Surveyors — MANKATO, MN · FARMONT, MN · SLEEPY EYE, MN · BURNSVILLE, MN · WILLMAR, MN · CHASKA, MN · RAMSEY, MN · MAPLEWOOD, MN · BAXTER, MN · ROCHESTER, MN · AMES, IA · SPENCER, IA

CASTING AND GRADE ADJUSTMENT RING DETAIL | City of St. Francis | DATE: 07/2013 | STD. DETAIL 7-500

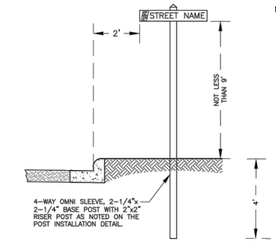

NOTES:
SIGN POSTS SHALL BE TELESPAR POSTS WITH BASE AS NOTED ON THE SIGN POST INSTALLATION DETAIL.

THE POST AND SIGN HARDWARE SHALL INCLUDE PLASTIC SPACERS FOR MOUNTING SIGNS.

POST SHALL HAVE A 2" PYRAMID CAP ON THE TOP OF THE POST OR EXTEND SIGN PANEL TO TOP OF POST.

STREET SIGNS SHALL BE A 9" ALUMINUM .080 GAUGE PLATE WITH 6" UPPERCASE WHITE LETTERS, NUMBERS, WHITE BORDER, AND MARKINGS, SERIES B LETTERS ON A GREEN BACKGROUND. THE REFLECTIVITY OF THE SIGN SHALL BE 3M VIP GRADE.

THE "5 SF" PORTION OF THE CITY OF ST. FRANCIS LOGO SHALL BE INSTALLED ON ALL STREET NAME SIGN PANELS TO THE LEFT OF THE STREET NAME.

SIGNS AND INSTALLATION OF SIGNS SHALL BE IN ACCORDANCE WITH THE "MINNESOTA MANUAL OF UNIFORM TRAFFIC CONTROL DEVICES", LATEST EDITION.

SIGN BASE MATERIAL SHALL BE ALUMINUM.

STREET NAME SIGN AND POST

NOT TO SCALE

Y:\STFR\2013 Details\STFR_8-114.dwg

BOLTON & MENK, INC. Consulting Engineers & Surveyors — MANKATO, MN · FARMONT, MN · SLEEPY EYE, MN · BURNSVILLE, MN · WILLMAR, MN · CHASKA, MN · RAMSEY, MN · MAPLEWOOD, MN · BAXTER, MN · ROCHESTER, MN · AMES, IA · SPENCER, IA

STREET NAME SIGN AND POST | City of St. Francis | DATE: 07/2013 | STD. DETAIL 8-114

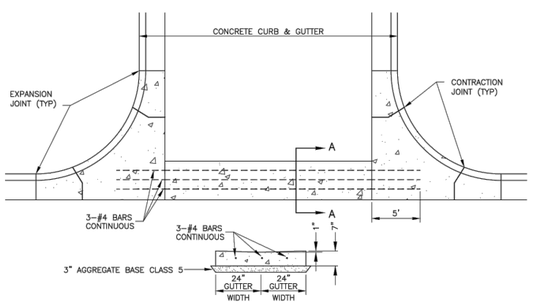

SECTION A

CONCRETE VALLEY GUTTER

NOT TO SCALE

Y:\STFR\2013 Details\STFR_7-100.dwg

BOLTON & MENK, INC. Consulting Engineers & Surveyors — MANKATO, MN · FARMONT, MN · SLEEPY EYE, MN · BURNSVILLE, MN · WILLMAR, MN · CHASKA, MN · RAMSEY, MN · MAPLEWOOD, MN · BAXTER, MN · ROCHESTER, MN · AMES, IA · SPENCER, IA

CONCRETE VALLEY GUTTER | City of St. Francis | DATE: 07/2013 | STD. DETAIL 7-100

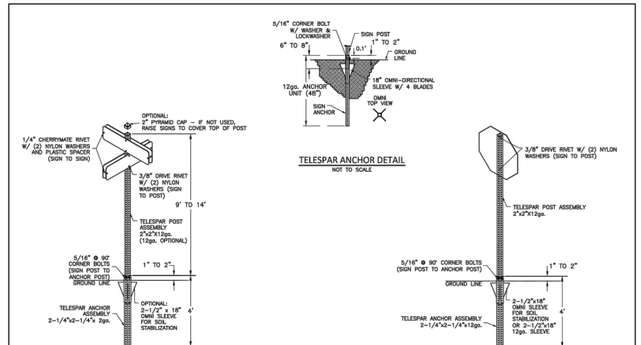

TELESPAR ANCHOR DETAIL
NOT TO SCALE

STREET NAME SIGN POST DETAIL
NOT TO SCALE

TRAFFIC SIGN POST DETAIL
NOT TO SCALE

Y:\STFR\2013 Details\STFR_8-115.dwg

BOLTON & MENK, INC. Consulting Engineers & Surveyors — MANKATO, MN · FARMONT, MN · SLEEPY EYE, MN · BURNSVILLE, MN · WILLMAR, MN · CHASKA, MN · RAMSEY, MN · MAPLEWOOD, MN · BAXTER, MN · ROCHESTER, MN · AMES, IA · SPENCER, IA

SIGN POST INSTALLATION | City of St. Francis | DATE: 07/2013 | STD. DETAIL 8-115

FURNISH AND INSTALL NEW SIGNS

SIGN NUMBER	SIGN	COLOR & SIZE	DESCRIPTION
*R1-1	STOP	18"X18" 30"X30" 36"X36" WHITE ON RED	TYPE IX 3M DIAMOND GRADE VIP ALUMINUM STOP SIGN
R2-1	SPEED LIMIT XX	24"X30" BLACK ON WHITE	TYPE IX 3M DIAMOND GRADE VIP ALUMINUM SPEED LIMIT SIGN
W11-X5	WATCH FOR CHILDREN	30"X30" BLACK ON YELLOW	TYPE IX 3M DIAMOND GRADE VIP ALUMINUM WATCH FOR CHILDREN SIGN
SPECIAL	NO PARKING ON ANY CITY STREETS 12AM-6AM EXC 1-APR, 15	18"X24" RED ON WHITE	TYPE IX 3M DIAMOND GRADE VIP ALUMINUM NO PARKING ON CITY STREETS SIGN
W11-2		30"X30" BLACK ON WHITE	TYPE IX 3M DIAMOND GRADE VIP ALUMINUM PEDESTRIAN CROSSING SIGN
R5-3	NO MOTOR VEHICLES	24"X24" 18"X18" BLACK ON WHITE	TYPE IX 3M DIAMOND GRADE VIP ALUMINUM NO MOTOR VEHICLES SIGN

SIGN NUMBER	SIGN	COLOR & SIZE	DESCRIPTION
W16-7		24"X12" BLACK ON YELLOW	TYPE IX 3M DIAMOND GRADE VIP ALUMINUM DIAGONAL ARROW SIGN
SPECIAL	DOGS MUST BE LEASHED	18"X24" BLACK ON WHITE	TYPE IX 3M DIAMOND GRADE VIP ALUMINUM DOGS MUST BE LEASHED SIGN
SPECIAL	PARK CLOSED 10PM-5AM	18"X24" BLACK ON WHITE	TYPE IX 3M DIAMOND GRADE VIP ALUMINUM PARK CLOSED SIGN
SPECIAL	PLANNED FUTURE THROUGH STREET	18"X24" BLACK ON WHITE	TYPE IX 3M DIAMOND GRADE VIP ALUMINUM FUTURE STREET SIGN

NOTES:
1. SIGNS AND INSTALLATION OF SIGNS SHALL BE IN ACCORDANCE WITH THE "MINNESOTA MANUAL ON UNIFORM TRAFFIC CONTROL DEVICES", MOST RECENT EDITION.
2. SIGN BASE MATERIAL SHALL BE ALUMINUM.
3. SIGNS REQUIRE 3M DIAMOND GRADE VIP GRADE SHEETING
4. ALL SIGNS SHALL BE CLEARLY MARKED ON THE BACK SIDE WITH THE INSTALLATION DATE OF THE SIGN AS WELL AS THE MANUFACTURER'S RETRO REFLECTIVITY WARRANTY.

STREET SIGNS

NOT TO SCALE

Y:\STFR\2013 Details\STFR_8-116.dwg

BOLTON & MENK, INC. Consulting Engineers & Surveyors — MANKATO, MN · FARMONT, MN · SLEEPY EYE, MN · BURNSVILLE, MN · WILLMAR, MN · CHASKA, MN · RAMSEY, MN · MAPLEWOOD, MN · BAXTER, MN · ROCHESTER, MN · AMES, IA · SPENCER, IA

STREET SIGNS | City of St. Francis | DATE: 07/2013 | STD. DETAIL 8-116

I HEREBY CERTIFY THAT THIS PLAN, SPECIFICATION, OR REPORT WAS PREPARED BY ME OR UNDER MY DIRECT SUPERVISION AND THAT I AM A DULY LICENSED PROFESSIONAL ENGINEER UNDER THE LAWS OF THE STATE OF MINNESOTA.

NAME

DATE 5/18/2023 LIC. NO. 15051

REV	REVISION DESCRIPTION	DWN	APP	REV DATE
1	Comments from City	MPJ	DJJ	5/18/2023

JOHNSON ENGINEERING GROUP
PO Box 384
Windom, MN 56101
(507) 832-8450

DWN BY	CHK'D	APP'D
MPJ	MPJ	DJJ

DWG DATE 3/17/2023
SCALE N/A

PROJECT Turtle Ponds 6th Addition
CLIENT BlueWaters Companies, Inc
17029 Vickers Street NE
Ham Lake, MN 55304

SHEET TITLE Typical Details Site

PROJECT NO.	SHEET NO.	REV NO.
0093-01	G-201A	1

C:\Users\mpjoh\Johnson Engineering Dropbox\Johnson Engineering Group\Drafting\0093 BlueWaters Companies\01 Turtle Ponds 6th Addition\CAD\G-201A Typical Details & Details.dwg 5/18/2023 9:37 AM

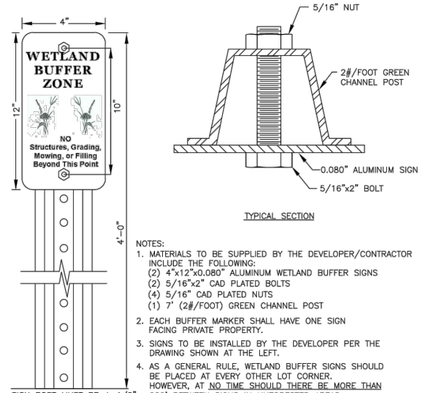

TYPICAL SECTION

NOTES:

1. MATERIALS TO BE SUPPLIED BY THE DEVELOPER/CONTRACTOR INCLUDE THE FOLLOWING:
   (2) 4"x12"x0.080" ALUMINUM WETLAND BUFFER SIGNS
   (2) 5/16"x2" CAD PLATED BOLTS
   (4) 5/16" CAD PLATED NUTS
   (1) 7' (2#/FOOT) GREEN CHANNEL POST
2. EACH BUFFER MARKER SHALL HAVE ONE SIGN FACING PRIVATE PROPERTY.
3. SIGNS TO BE INSTALLED BY THE DEVELOPER PER THE DRAWING SHOWN AT THE LEFT.
4. AS A GENERAL RULE, WETLAND BUFFER SIGNS SHOULD BE PLACED AT EVERY OTHER LOT CORNER. HOWEVER, AT NO TIME SHOULD THERE BE MORE THAN 200' BETWEEN SIGNS IN UNFORESTED AREAS AND 150' IN FORESTED AREAS.
5. SIGN PANELS SHALL CONSIST OF GREEN BACKGROUND WITH WHITE LETTERING, TYPE IX, 3M DIAMOND GRADE VIP SHEETING.

WETLAND BUFFER ZONE SIGN INSTALLATION

NOT TO SCALE

Y:\STFR\2013 Details\STFR_8-118.dwg

BOLTON & MENK, INC. Consulting Engineers & Surveyors MANKATO, MN FARMONT, MN SLEEPY EYE, MN BURNSVILLE, MN MILLABO, MN CHADRON, NE ORANGE, CA NORCROSS, MN BOYSEN, MN ROCHESTER, MN AMES, IA SPENCER, IA	WETLAND BUFFER ZONE SIGN INSTALLATION	City of St. Francis	DATE: 07/2013 STD. DETAIL 8-118

C:\Users\mpjoh\Johnson Engineering Dropbox\Johnson Engineering Group\Drafting\0093 BlueWaters Companies\01 Turtle Ponds 6th Addition\CAD\GEN\Typical Details & Details.dwg 5/18/2023 9:38 AM

I HEREBY CERTIFY THAT THIS PLAN, SPECIFICATION, OR REPORT WAS PREPARED BY ME OR UNDER MY DIRECT SUPERVISION AND THAT I AM A DULY LICENSED PROFESSIONAL ENGINEER UNDER THE LAWS OF THE STATE OF MINNESOTA.

NAME

DATE 5/18/2023 LIC. NO. 15051

REV	REVISION DESCRIPTION	DWN	APP	REV DATE
1	Comments from City	MPJ	DJJ	5/18/2023

JOHNSON ENGINEERING GROUP

PO Box 384
Windom, MN 56101
(507) 832-8450

DWN BY	CHK'D	APP'D
MPJ	MPJ	DJJ

DWG DATE 3/17/2023

SCALE N/A

PROJECT Turtle Ponds 6th Addition

CLIENT BlueWaters Companies, Inc
17029 Vickers Street NE
Ham Lake, MN 55304

SHEET TITLE Typical Details Site

PROJECT NO.	SHEET NO.	REV NO.
0093-01	G-201B	1

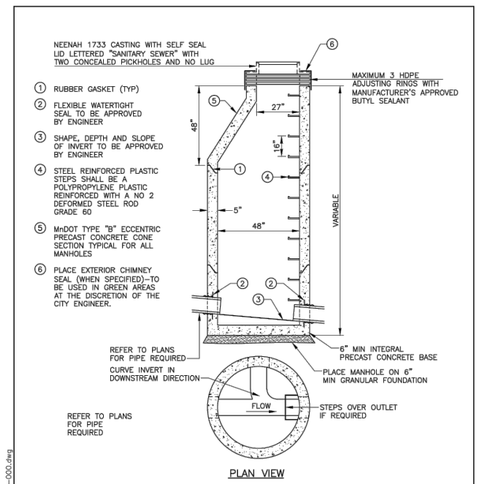

SANITARY MANHOLE
NOT TO SCALE

BOLTON & MENK, INC. Consulting Engineers & Surveyors — MANKATO, MN · FARMONT, MN · SLEEPY EYE, MN · BURNSVILLE, MN · WILLMAR, MN · CHASKA, MN · RAMSEY, MN · WAYZATA, MN · WAUPACA, WI · BAXTER, MN · ROCHESTER, MN · AMES, IA · SPENCER, IA

SANITARY MANHOLE | St. Francis | DATE: 07/2013 | STD. DETAIL 5–000

Y:\STFR\2013 Details\STFR_5-000.dwg

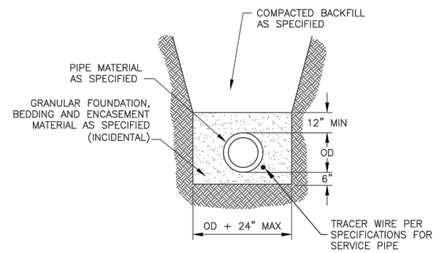

PVC SANITARY SEWER TRENCH
NOT TO SCALE

BOLTON & MENK, INC. Consulting Engineers & Surveyors — MANKATO, MN · FARMONT, MN · SLEEPY EYE, MN · BURNSVILLE, MN · WILLMAR, MN · CHASKA, MN · RAMSEY, MN · WAYZATA, MN · WAUPACA, WI · BAXTER, MN · ROCHESTER, MN · AMES, IA · SPENCER, IA

PVC SANITARY SEWER TRENCH | St. Francis | DATE: 07/2013 | STD. DETAIL 5–200

Y:\STFR\2013 Details\STFR_5-200.dwg

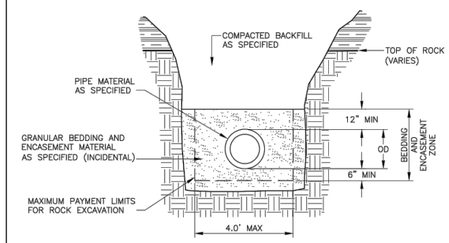

ROCK EXCAVATION FOR WATERMAIN AND SANITARY SEWER
NOT TO SCALE

BOLTON & MENK, INC. Consulting Engineers & Surveyors — MANKATO, MN · FARMONT, MN · SLEEPY EYE, MN · BURNSVILLE, MN · WILLMAR, MN · CHASKA, MN · RAMSEY, MN · WAYZATA, MN · WAUPACA, WI · BAXTER, MN · ROCHESTER, MN · AMES, IA · SPENCER, IA

ROCK EXCAVATION FOR WATERMAIN AND SANITARY SEWER | St. Francis | DATE: 07/2013 | STD. DETAIL 5–201

Y:\STFR\2013 Details\STFR_5-201.dwg

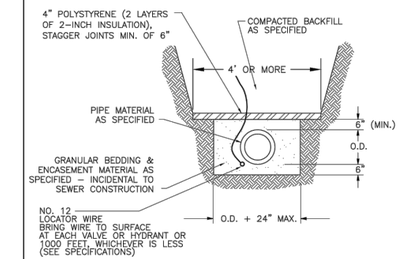

NOTE: IF SERVICE LINE HAS LESS THAN 7' OF COVER INSULATION WIDTH SHALL INCREASE AS FOLLOWS:

DEPTH OF COVER	WIDTH OF INSULATION
6 FT. TO 6.5 FT.	6 FT.
5 FT.	8 FT.
4.5 FT.	10 FT.

INSULATION DETAIL
FORCEMAIN, SANITARY SEWER AND SERVICES
NOT TO SCALE

BOLTON & MENK, INC. Consulting Engineers & Surveyors — MANKATO, MN · FARMONT, MN · SLEEPY EYE, MN · BURNSVILLE, MN · WILLMAR, MN · CHASKA, MN · RAMSEY, MN · WAYZATA, MN · WAUPACA, WI · BAXTER, MN · ROCHESTER, MN · AMES, IA · SPENCER, IA

INSULATION FOR FORCEMAIN AND SANITARY | St. Francis | DATE: 07/2013 | STD. DETAIL 5–202

Y:\STFR\2013 Details\STFR_5-202.dwg

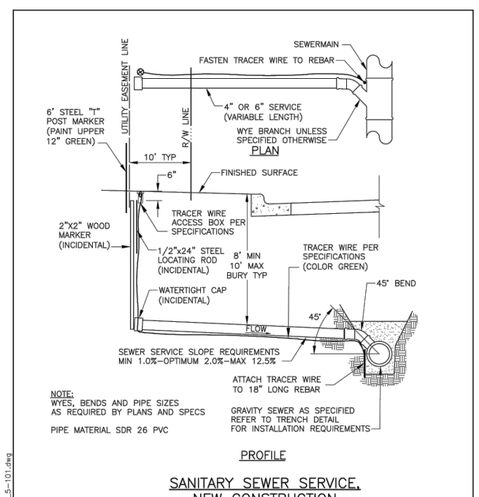

SANITARY SEWER SERVICE, NEW CONSTRUCTION
NOT TO SCALE

BOLTON & MENK, INC. Consulting Engineers & Surveyors — MANKATO, MN · FARMONT, MN · SLEEPY EYE, MN · BURNSVILLE, MN · WILLMAR, MN · CHASKA, MN · RAMSEY, MN · WAYZATA, MN · WAUPACA, WI · BAXTER, MN · ROCHESTER, MN · AMES, IA · SPENCER, IA

SANITARY SEWER SERVICE NEW CONSTRUCTION | St. Francis | DATE: 07/2013 | STD. DETAIL 5–101

Y:\STFR\2013 Details\STFR_5-101.dwg

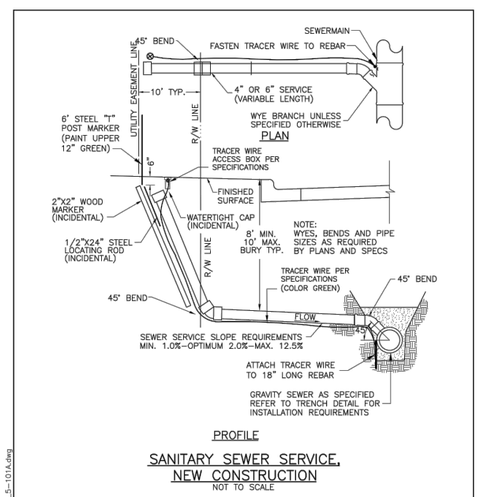

SANITARY SEWER SERVICE, NEW CONSTRUCTION
NOT TO SCALE
(IN AREAS OF POSSIBLE HIGH GROUNDWATER)

BOLTON & MENK, INC. Consulting Engineers & Surveyors — MANKATO, MN · FARMONT, MN · SLEEPY EYE, MN · BURNSVILLE, MN · WILLMAR, MN · CHASKA, MN · RAMSEY, MN · WAYZATA, MN · WAUPACA, WI · BAXTER, MN · ROCHESTER, MN · AMES, IA · SPENCER, IA

SANITARY SEWER SERVICE NEW CONSTRUCTION (HIGH GROUND WATER) | St. Francis | DATE: 07/2013 | STD. DETAIL 5–101A

Y:\STFR\2013 Details\STFR_5-101A.dwg

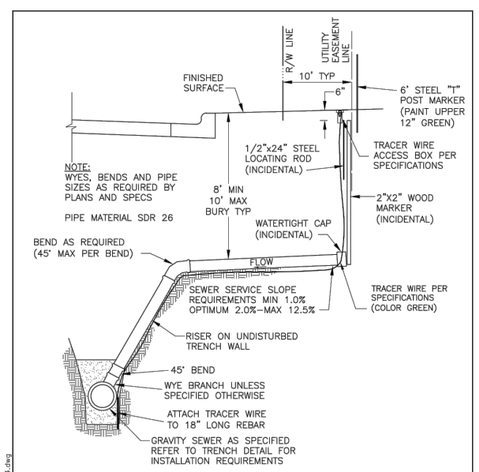

SANITARY SEWER SERVICE RISER, NEW CONSTRUCTION
NOT TO SCALE

BOLTON & MENK, INC. Consulting Engineers & Surveyors — MANKATO, MN · FARMONT, MN · SLEEPY EYE, MN · BURNSVILLE, MN · WILLMAR, MN · CHASKA, MN · RAMSEY, MN · WAYZATA, MN · WAUPACA, WI · BAXTER, MN · ROCHESTER, MN · AMES, IA · SPENCER, IA

SANITARY SEWER SERVICE RISER NEW CONSTRUCTION | St. Francis | DATE: 07/2013 | STD. DETAIL 5–104

Y:\STFR\2013 Details\STFR_5-104.dwg

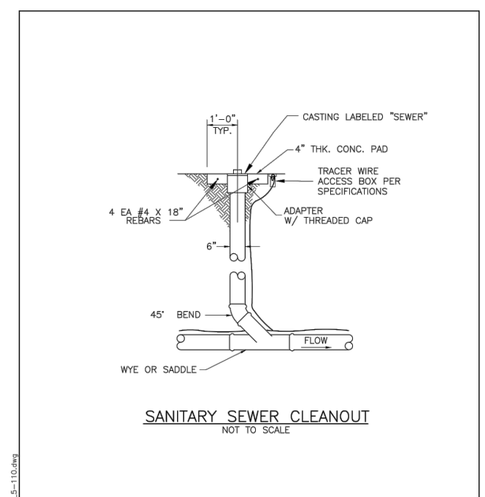

SANITARY SEWER CLEANOUT
NOT TO SCALE

BOLTON & MENK, INC. Consulting Engineers & Surveyors — MANKATO, MN · FARMONT, MN · SLEEPY EYE, MN · BURNSVILLE, MN · WILLMAR, MN · CHASKA, MN · RAMSEY, MN · WAYZATA, MN · WAUPACA, WI · BAXTER, MN · ROCHESTER, MN · AMES, IA · SPENCER, IA

SANITARY SEWER CLEANOUT | St. Francis | DATE: 07/2013 | STD. DETAIL 5–110

Y:\STFR\2013 Details\STFR_5-110.dwg

I HEREBY CERTIFY THAT THIS PLAN, SPECIFICATION, OR REPORT WAS PREPARED BY ME OR UNDER MY DIRECT SUPERVISION AND THAT I AM A DULY LICENSED PROFESSIONAL ENGINEER UNDER THE LAWS OF THE STATE OF MINNESOTA.

NAME

DATE 5/18/2023 LIC. NO. 15051

REV	REVISION DESCRIPTION	DWN	APP	REV DATE
1	Comments from City	MPJ	DJJ	5/18/2023

JOHNSON ENGINEERING GROUP
PO Box 384
Windom, MN 56101
(507) 832–8450

DWN BY	CHK'D	APP'D
MPJ	MPJ	DJJ

DWG DATE 3/17/2023
SCALE N/A

PROJECT Turtle Ponds 6th Addition
CLIENT BlueWaters Companies, Inc
17029 Vickers Street NE
Ham Lake, MN 55304

SHEET TITLE Typical Details Sanitary Sewer

PROJECT NO.	SHEET NO.	REV NO.
0093–01	G–202A	1

C:\Users\mpjoh\Johnson Engineering Dropbox\Johnson Engineering Group\Drafting\0093 BlueWaters Companies\01 Turtle Ponds 6th Addition\CAD\G-Details\Typical Details & Details.dwg 2:38 AM

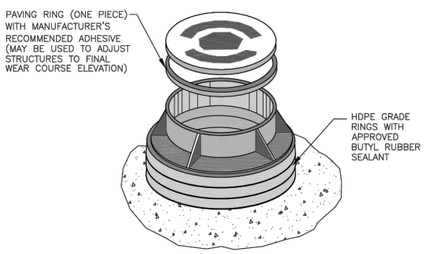

NOTE: A FIVE HUNDRED DOLLAR ($500) PENALTY WILL BE ENFORCED FOR EACH CASTING NOT PROPERLY ADJUSTED REQUIRING A PATCH IN THE BITUMINOUS WEARING COURSE.

CASTING & GRADE ADJUSTMENT – SANITARY SEWER

NOT TO SCALE

Y:\STFRX\2013 Details\STFR_5-019.dwg

BOLTON & MENK, INC. Consulting Engineers & Surveyors	CASTING AND GRADE ADJUSTMENT DETAIL–SANITARY	City of St. Francis	DATE: 07/2013 STD. DETAIL 5–019

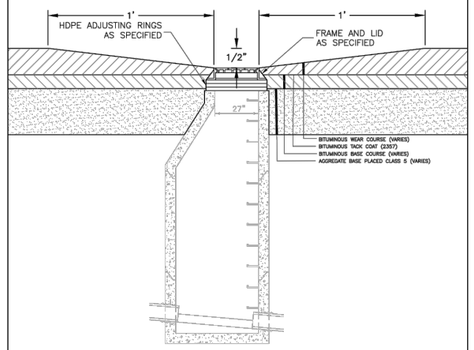

MANHOLE PAVING DETAIL

NOT TO SCALE

NOTE: A FIVE HUNDRED DOLLAR ($500) PENALTY WILL BE ENFORCED FOR EACH CASTING NOT PROPERLY ADJUSTED REQUIRING A PATCH IN THE BITUMINOUS WEARING COURSE.

Y:\STFRX\2013 Details\STFR_5-400.dwg

BOLTON & MENK, INC. Consulting Engineers & Surveyors	MANHOLE PAVING DETAIL	City of St. Francis	DATE: 07/2013 STD. DETAIL 5–400

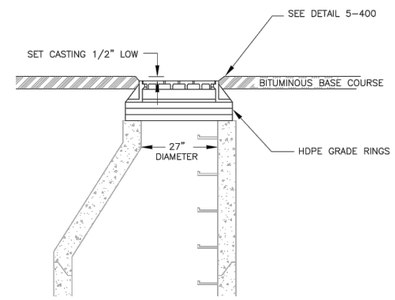

NOTE: A FIVE HUNDRED DOLLAR ($500) PENALTY WILL BE ENFORCED FOR EACH CASTING NOT PROPERLY ADJUSTED REQUIRING A PATCH IN THE BITUMINOUS WEARING COURSE.

Y:\STFRX\2013 Details\STFR_5-401.dwg

BOLTON & MENK, INC. Consulting Engineers & Surveyors	MANHOLE ADJUSTMENT DETAIL BITUMINOUS BASE COURSE	City of St. Francis	DATE: 07/2013 STD. DETAIL 5–401

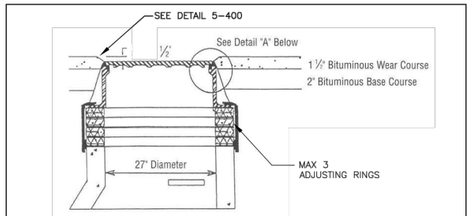

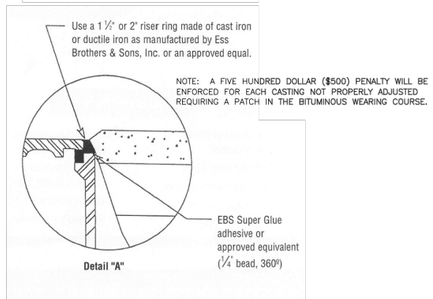

NOTE: A FIVE HUNDRED DOLLAR ($500) PENALTY WILL BE ENFORCED FOR EACH CASTING NOT PROPERLY ADJUSTED REQUIRING A PATCH IN THE BITUMINOUS WEARING COURSE.

Y:\STFRX\2013 Details\STFR_5-402.dwg

BOLTON & MENK, INC. Consulting Engineers & Surveyors	MANHOLE ADJUSTMENT DETAIL BITUMINOUS WEAR COURSE	City of St. Francis	DATE: 07/2013 STD. DETAIL 5–402

I HEREBY CERTIFY THAT THIS PLAN, SPECIFICATION, OR REPORT WAS PREPARED BY ME OR UNDER MY DIRECT SUPERVISION AND THAT I AM A DULY LICENSED PROFESSIONAL ENGINEER UNDER THE LAWS OF THE STATE OF MINNESOTA.

NAME

DATE 5/18/2023 LIC. NO. 15051

REV	REVISION DESCRIPTION	DWN	APP	REV DATE
1	Comments from City	MPJ	DJJ	5/18/2023

JOHNSON ENGINEERING GROUP
PO Box 384
Windom, MN 56101
(507) 832-8450

DWN BY	CHK'D	APP'D	PROJECT	Turtle Ponds 6th Addition	SHEET TITLE	Typical Details Sanitary Sewer
MPJ	MPJ	DJJ				
DWG DATE 3/17/2023			CLIENT	BlueWaters Companies, Inc 17029 Vickers Street NE Ham Lake, MN 55304	PROJECT NO. 0093–01	SHEET NO. G–202B / REV NO. 1
SCALE N/A						

C:\Users\mpjoh\Johnson Engineering Dropbox\Johnson Engineering Group\Drafting\0093 BlueWaters Companies\01 Turtle Ponds 6th Addition\CAD\GEN\Typical Details & Details.dwg 5/18/2023 9:38 AM

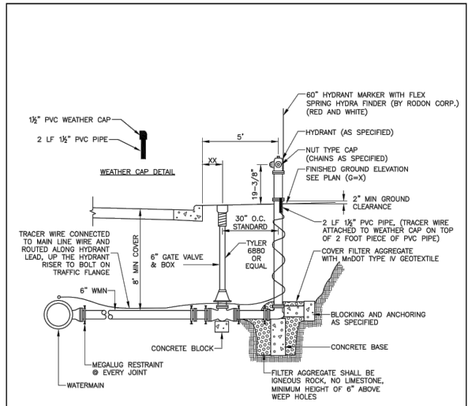

NOTE:
ALL HYDRANTS SHALL BE PAINTED AFTER INSTALLATION. ALL ABRADED SURFACES SHALL BE CLEANED PRIOR TO APPLICATION OF FINAL FIELD COAT.

HYDRANTS LOCATED WHERE THE GROUNDWATER TABLE IS ABOVE THE DRAIN OUTLET SHALL HAVE THE OUTLET DRAIN PLUGGED AND SHALL BE EQUIPPED WITH A TAG STATING "PUMP AFTER USE." PUMPER NOZZLE SHALL BE PAINTED BLUE.

HYDRANT INSTALLATION, MEGALUGS
NOT TO SCALE

Y:\STFR\2013 Details\STFR_6-000.dwg

BOLTON & MENK, INC. Consulting Engineers & Surveyors — MANKATO, MN · FARMONT, MN · SLEEPY EYE, MN · BURNSVILLE, MN · WILLMAR, MN · PARKERS PRAIRIE, MN · ELBOW LAKE, MN · BEMIDJI, MN · BAXTER, MN · ROCHESTER, MN · AMES, IA · SPENCER, IA

HYDRANT INSTALLATION MEGALUGS	St. Francis	DATE: 07/2013 STD. DETAIL 6-000

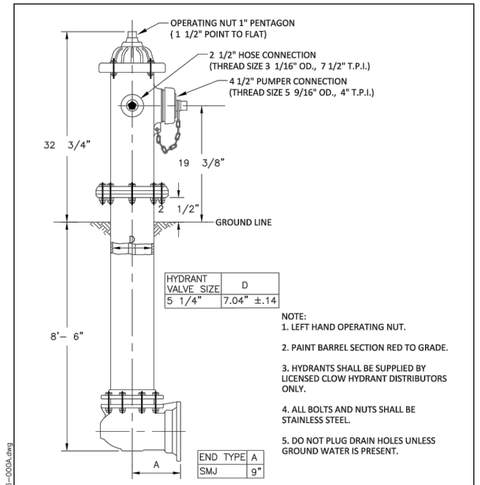

HYDRANT VALVE SIZE	D
5 1/4"	7.04" ±.14

END TYPE	A
SMJ	9"

NOTE:
1. LEFT HAND OPERATING NUT.
2. PAINT BARREL SECTION RED TO GRADE.
3. HYDRANTS SHALL BE SUPPLIED BY LICENSED CLOW HYDRANT DISTRIBUTORS ONLY.
4. ALL BOLTS AND NUTS SHALL BE STAINLESS STEEL.
5. DO NOT PLUG DRAIN HOLES UNLESS GROUND WATER IS PRESENT.

CLOW MEDALLION HYDRANT
NOT TO SCALE

Y:\STFR\2013 Details\STFR_6-000A.dwg

BOLTON & MENK, INC. Consulting Engineers & Surveyors — MANKATO, MN · FARMONT, MN · SLEEPY EYE, MN · BURNSVILLE, MN · WILLMAR, MN · PARKERS PRAIRIE, MN · ELBOW LAKE, MN · BEMIDJI, MN · BAXTER, MN · ROCHESTER, MN · AMES, IA · SPENCER, IA

CLOW MEDALLION HYDRANT	St. Francis	DATE: 07/2013 STD. DETAIL 6-000A

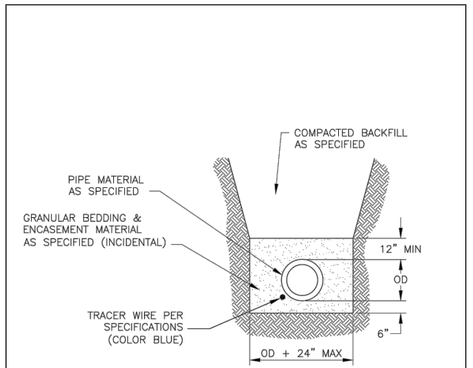

PVC C-900 WATERMAIN TRENCH
NOT TO SCALE

Y:\STFR\2013 Details\STFR_6-200.dwg

BOLTON & MENK, INC. Consulting Engineers & Surveyors — MANKATO, MN · FARMONT, MN · SLEEPY EYE, MN · BURNSVILLE, MN · WILLMAR, MN · PARKERS PRAIRIE, MN · ELBOW LAKE, MN · BEMIDJI, MN · BAXTER, MN · ROCHESTER, MN · AMES, IA · SPENCER, IA

PVC C-900 WATERMAIN TRENCH	St. Francis	DATE: 07/2013 STD. DETAIL 6-200

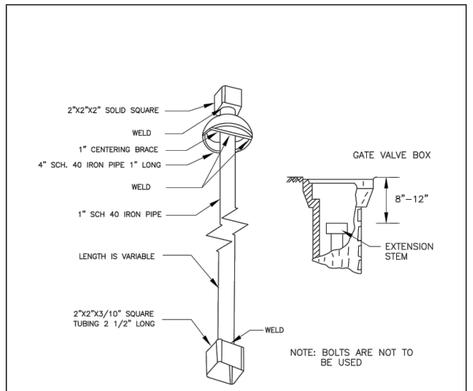

NOTE: BOLTS ARE NOT TO BE USED

AFTER FABRICATION, THE ENTIRE GATE VALVE EXTENSION STEM SHALL BE PAINTED WITH A SHOP APPLIED PRIMER AND EXTERIOR EPOXY PAINT

GATE VALVE EXTENSION STEM
NOT TO SCALE

Y:\STFR\2013 Details\STFR_6-404.dwg

BOLTON & MENK, INC. Consulting Engineers & Surveyors — MANKATO, MN · FARMONT, MN · SLEEPY EYE, MN · BURNSVILLE, MN · WILLMAR, MN · PARKERS PRAIRIE, MN · ELBOW LAKE, MN · BEMIDJI, MN · BAXTER, MN · ROCHESTER, MN · AMES, IA · SPENCER, IA

GATE VALVE EXTENSION STEM	St. Francis	DATE: 07/2013 STD. DETAIL 6-404

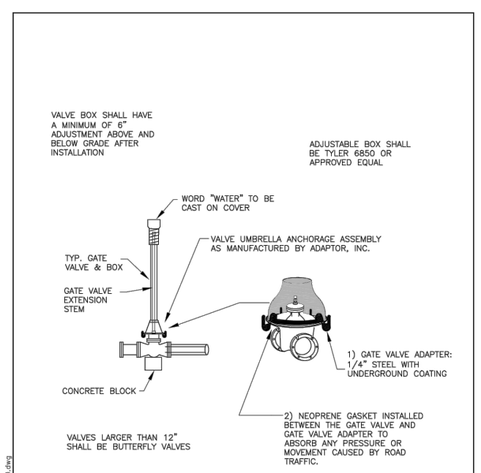

GATE VALVE INSTALLATION
NOT TO SCALE

Y:\STFR\2013 Details\STFR_6-400.dwg

BOLTON & MENK, INC. Consulting Engineers & Surveyors — MANKATO, MN · FARMONT, MN · SLEEPY EYE, MN · BURNSVILLE, MN · WILLMAR, MN · PARKERS PRAIRIE, MN · ELBOW LAKE, MN · BEMIDJI, MN · BAXTER, MN · ROCHESTER, MN · AMES, IA · SPENCER, IA

GATE VALVE INSTALLATION	St. Francis	DATE: 07/2013 STD. DETAIL 6-400

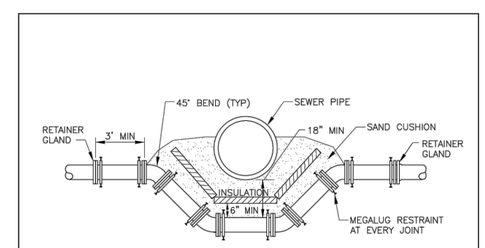

NOTES:
1. PROVIDE MEGALUG RESTRAINT AT JOINT ON BENDS AND AS SHOWN THIS DETAIL
2. COAT ALL ANCHORAGE AS PER SPECS
3. PROVIDE SAND CUSHION BETWEEN TOP OF WATERMAIN AND BOTTOM OF SEWER PIPE, MIN DIMENSIONS AS SHOWN THIS DETAIL (INCIDENTAL)
4. INSULATION TO BE 4" THICK POLYSTYRENE
5. IN AREAS OF GREATER LONGITUDINAL SPACE, THE WATERMAIN SHALL BE GRADUALLY LOWERED AND RAISED, USING NO BENDS, OVER A DISTANCE OF 200'.

WATERMAIN OFFSET
NOT TO SCALE

Y:\STFR\2013 Details\STFR_6-203.dwg

BOLTON & MENK, INC. Consulting Engineers & Surveyors — MANKATO, MN · FARMONT, MN · SLEEPY EYE, MN · BURNSVILLE, MN · WILLMAR, MN · PARKERS PRAIRIE, MN · ELBOW LAKE, MN · BEMIDJI, MN · BAXTER, MN · ROCHESTER, MN · AMES, IA · SPENCER, IA

WATERMAIN OFFSET	St. Francis	DATE: 07/2013 STD. DETAIL 6-203

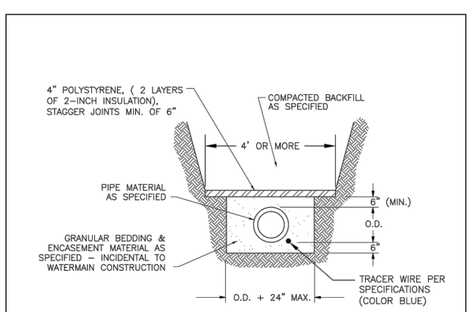

NOTE: IF SERVICE LINE HAS LESS THAN 7.0' OF COVER INSULATION WIDTH SHALL INCREASE AS FOLLOWS:

DEPTH OF COVER	WIDTH OF INSULATION
6 FT. TO 6.5 FT.	6 FT.
5 FT.	8 FT.
4.5 FT.	10 FT.

WATERMAIN INSULATION
NOT TO SCALE

Y:\STFR\2013 Details\STFR_6-202.dwg

BOLTON & MENK, INC. Consulting Engineers & Surveyors — MANKATO, MN · FARMONT, MN · SLEEPY EYE, MN · BURNSVILLE, MN · WILLMAR, MN · PARKERS PRAIRIE, MN · ELBOW LAKE, MN · BEMIDJI, MN · BAXTER, MN · ROCHESTER, MN · AMES, IA · SPENCER, IA

WATERMAIN INSULATION	St. Francis	DATE: 07/2013 STD. DETAIL 6-202

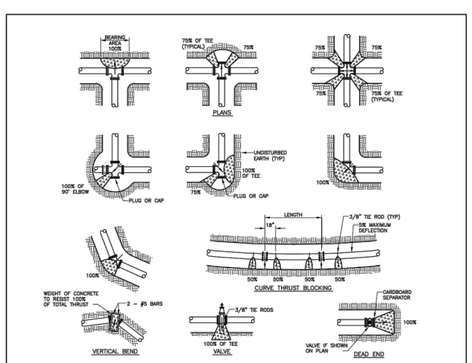

100% BEARING AREA (SQ FT)					
PIPE SIZE	DEAD END OR TEE	90° ELBOW	45° ELBOW	22 1/2° ELBOW	11 1/4° ELBOW
4	2.4	3.4	1.9	0.9	
6	4.9	6.9	3.8	1.9	
8	8.4	11.8	6.4	3.2	
10	13.7	19.3	10.5	5.4	
12	19.4	27.5	14.9	7.7	
14	26.3	37.0	20.1	10.3	
16	34.3	48.3	26.2	13.3	
18	43.5	61.8	33.2	17.1	
20	53.7	76.4	41.1	21.2	
24	77.3	108.9	59.8	30.5	

NOTE:
BEARING AREAS ARE BASED ON 250 LB MAXIMUM PRESSURE AND SOIL BEARING STRENGTH OF 2000 LB/SQ FT.

ARROWS (←→) INDICATE THRUST DIRECTION

NOTES:
1. FIGURE (100%) AT THRUST BLOCK INDICATES PER CENT OF TOTAL THRUST TO BE APPLIED FOR BEARING AREA.
2. RESTRAINING RODS ARE REQUIRED AT ALL TEES AND AT BENDS DEFLECTING 22-1/2° OR MORE.
3. SEE SOILS REPORT FOR BEARING STRENGTH OF SOIL. IN ABSENCE OF A SOILS REPORT, AN AVERAGE SOIL (SPANDABLE MEDIUM CLAY) CAN BE ASSUMED TO HAVE A BEARING STRENGTH OF 2000 PSI.

SIDE THRUST PER 100 LB/SQ IN PRESSURE PER DEGREE OF DEFLECTION			
PIPE SIZE	SIDE THRUST-LB	PIPE SIZE	SIDE THRUST-LB
4	35	14	377
6	72	16	495
8	122	18	685
10	197	20	790
12	278	24	1150

MULTIPLY THRUST BY DEGREE OF DEFLECTION TO OBTAIN TOTAL THRUST

CONCRETE THRUST BLOCKS
NOT TO SCALE

Y:\STFR\2013 Details\STFR_6-207.dwg

BOLTON & MENK, INC. Consulting Engineers & Surveyors — MANKATO, MN · FARMONT, MN · SLEEPY EYE, MN · BURNSVILLE, MN · WILLMAR, MN · PARKERS PRAIRIE, MN · ELBOW LAKE, MN · BEMIDJI, MN · BAXTER, MN · ROCHESTER, MN · AMES, IA · SPENCER, IA

CONCRETE THRUST BLOCKS	St. Francis	DATE: 07/2013 STD. DETAIL 6-207

I HEREBY CERTIFY THAT THIS PLAN, SPECIFICATION, OR REPORT WAS PREPARED BY ME OR UNDER MY DIRECT SUPERVISION AND THAT I AM A DULY LICENSED PROFESSIONAL ENGINEER UNDER THE LAWS OF THE STATE OF MINNESOTA.

NAME

DATE 5/18/2023 LIC. NO. 15051

REV	REVISION DESCRIPTION	DWN	APP	REV DATE
1	Comments from City	MPJ	DJJ	5/18/2023

JOHNSON ENGINEERING GROUP
PO Box 384
Windom, MN 56101
(507) 832-8450

DWN BY	CHK'D	APP'D	PROJECT	Turtle Ponds 6th Addition	SHEET TITLE	Typical Details Watermain
MPJ	MPJ	DJJ				
DWG DATE 3/17/2023			CLIENT	BlueWaters Companies, Inc 17029 Vickers Street NE Ham Lake, MN 55304	PROJECT NO. 0093-01	SHEET NO. G-203A / REV NO. 1
SCALE N/A						

C:\Users\mpjoh\Johnson Engineering Dropbox\Johnson Engineering Group\Drafting\0093 BlueWaters Companies\01 Turtle Ponds 6th Addition\Plans\G-203 & Details.dwg 5/18/23 9:38 AM

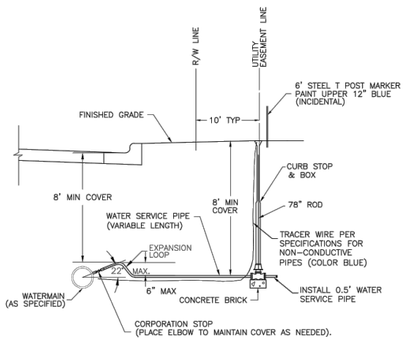

WATER SERVICE INSTALLATION
NEW CONSTRUCTION
NOT TO SCALE

Y:\STFR\2013 Details\STFR_6-101.dwg

BOLTON & MENK, INC. Consulting Engineers & Surveyors	WATER SERVICE INSTALLATION NEW CONSTRUCTION	St. Francis	DATE: 07/2013 STD. DETAIL 6-101

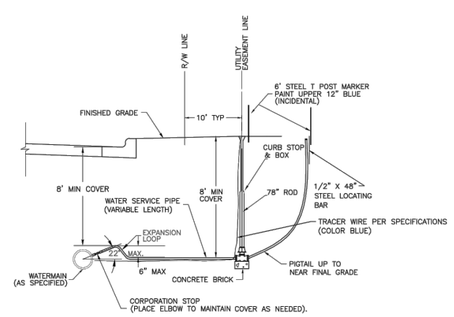

WATER SERVICE INSTALLATION
NEW CONSTRUCTION
NOT TO SCALE

(IN AREAS OF POSSIBLE HIGH GROUND WATER)

Y:\STFR\2013 Details\STFR_6-101A.dwg

BOLTON & MENK, INC. Consulting Engineers & Surveyors	WATER SERVICE INSTALLATION NEW CONSTRUCTION (HIGH GROUND WATER)	St. Francis	DATE: 07/2013 STD. DETAIL 6-101A

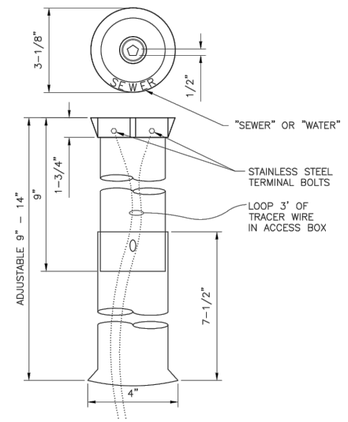

ADJUSTABLE
TRACER WIRE ACCESS BOX
NOT TO SCALE

Y:\STFR\2013 Details\STFR_6-303.dwg

BOLTON & MENK, INC. Consulting Engineers & Surveyors	ADJUSTABLE TRACER WIRE ACCESS BOX	St. Francis	DATE: 07/2013 STD. DETAIL 6-303

I HEREBY CERTIFY THAT THIS PLAN, SPECIFICATION, OR REPORT WAS PREPARED BY ME OR UNDER MY DIRECT SUPERVISION AND THAT I AM A DULY LICENSED PROFESSIONAL ENGINEER UNDER THE LAWS OF THE STATE OF MINNESOTA.

NAME

DATE 5/18/2023 LIC. NO. 15051

REV	REVISION DESCRIPTION	DWN	APP	REV DATE
1	Comments from City	MPJ	DJJ	5/18/2023

JOHNSON ENGINEERING GROUP
PO Box 384
Windom, MN 56101
(507) 832-8450

DWN BY	CHK'D	APP'D
MPJ	MPJ	DJJ

DWG DATE 3/17/2023
SCALE N/A

PROJECT Turtle Ponds 6th Addition
CLIENT BlueWaters Companies, Inc
17029 Vickers Street NE
Ham Lake, MN 55304

SHEET TITLE Typical Details Watermain

PROJECT NO.	SHEET NO.	REV NO.
0093-01	G-203B	1

C:\Users\mpjoh\Johnson Engineering Dropbox\Johnson Engineering Group\Drafting\0093 BlueWaters Companies\01 Turtle Ponds 6th Addition\Plans\G-203 & Details.dwg 2:39 AM

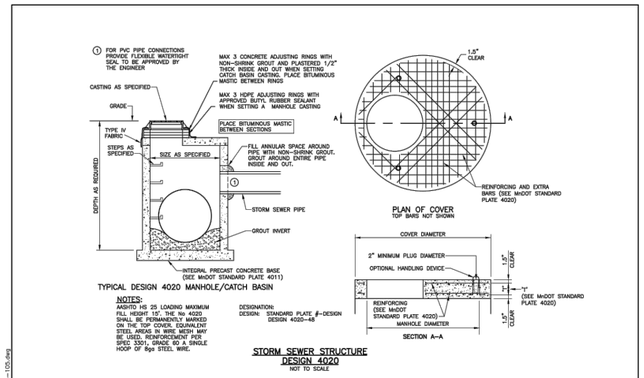

NOTES:
AASHTO H25 25 LOADING MAXIMUM FILL HEIGHT 15', THE No 4020 SHALL BE PERMANENTLY MARKED ON THE TOP COVER. EQUIVALENT STEEL AREAS IN WIRE MESH MAY BE USED. REINFORCING STEEL PER SPEC 3301, GRADE 60 A SINGLE HOOP OF 8ga STEEL WIRE.

DESIGNATION:
DESIGN: STANDARD PLATE #-DESIGN DESIGN 4020-48

STORM SEWER STRUCTURE
DESIGN 4020
NOT TO SCALE

Y:\STFR\2013 Details\STFR_4-105.dwg

BOLTON & MENK, INC.
Consulting Engineers & Surveyors
MANKATO, MN FAIRMONT, MN SLEEPY EYE, MN BURNSVILLE, MN WILLMAR, MN CHASKA, MN RAMSEY, MN MAPLEWOOD, MN BAXTER, MN ROCHESTER, MN AMES, IA SPENCER, IA

STORM SEWER STRUCTURE DESIGN 4020

City of St. Francis

DATE: 07/2013
STD. DETAIL 4-105

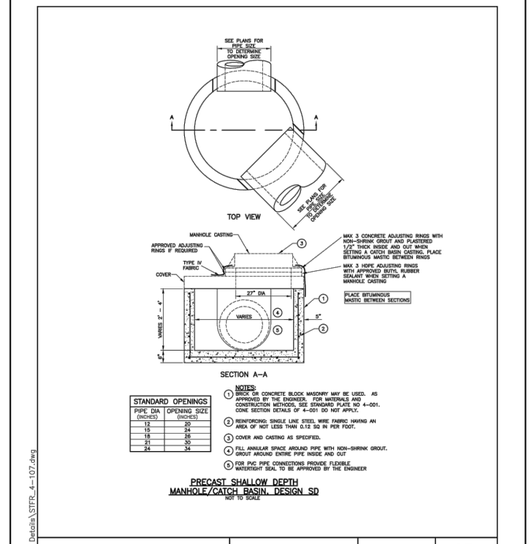

STANDARD OPENINGS	
PIPE DIA (IN)	OPENING SIZE (IN)
12	20
15	24
18	28
21	30
24	34

NOTES:
1. BRICK OR CONCRETE BLOCK MASONRY MAY BE USED. AS APPROVED BY THE ENGINEER. FOR MATERIALS AND CONSTRUCTION DETAILS SEE STANDARD PLATE No 4-001. CONE SECTION DETAILS OF 4-001 DO NOT APPLY.
2. REINFORCING: SINGLE LINE STEEL WIRE FABRIC HAVING AN AREA OF NOT LESS THAN 0.12 SQ IN PER FOOT.
3. COVER AND CASTING AS SPECIFIED.
4. FILL ANNULAR SPACE AROUND PIPE WITH NON-SHRINK GROUT. GROUT AROUND ENTIRE PIPE INSIDE AND OUT
5. FOR PVC PIPE CONNECTIONS PROVIDE FLEXIBLE WATERTIGHT SEAL TO BE APPROVED BY THE ENGINEER

PRECAST SHALLOW DEPTH
MANHOLE/CATCH BASIN DESIGN SD
NOT TO SCALE

Y:\STFR\2013 Details\STFR_4-107.dwg

BOLTON & MENK, INC.
Consulting Engineers & Surveyors
MANKATO, MN FAIRMONT, MN SLEEPY EYE, MN BURNSVILLE, MN WILLMAR, MN CHASKA, MN RAMSEY, MN MAPLEWOOD, MN BAXTER, MN ROCHESTER, MN AMES, IA SPENCER, IA

PRECAST SHALLOW DEPTH MH/CB DESIGN SD

City of St. Francis

DATE: 07/2013
STD. DETAIL 4-107

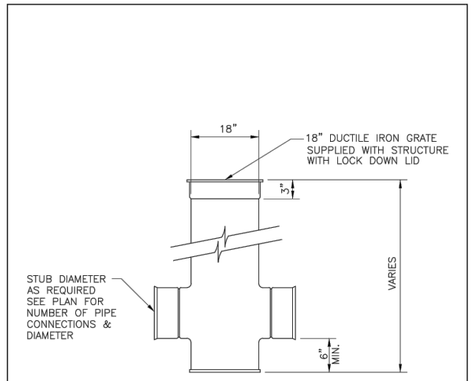

NOTE: REFER TO PLANS FOR REQUIRED PIPE SIZE

18" PVC DRAIN BASIN (DESIGN SPEC 1)
EQUAL TO NYLOPLAST PVC BASIN, OR APPROVED EQUAL

Y:\STFR\2013 Details\STFR_4-104.dwg

BOLTON & MENK, INC.
Consulting Engineers & Surveyors
MANKATO, MN FAIRMONT, MN SLEEPY EYE, MN BURNSVILLE, MN WILLMAR, MN CHASKA, MN RAMSEY, MN MAPLEWOOD, MN BAXTER, MN ROCHESTER, MN AMES, IA SPENCER, IA

PVC DRAIN BASIN DESIGN SPEC 1

City of St. Francis

DATE: 07/2013
STD. DETAIL 4-104

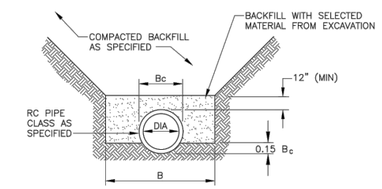

PIPE DIA	B
36" OR LESS	B_c + 24"
42" TO 54"	1.5 x B_c
60" OR OVER	B_c + 36"

RC PIPE
CLASS "C" BEDDING
NOT TO SCALE

Y:\STFR\2013 Details\STFR_4-000.dwg

BOLTON & MENK, INC.
Consulting Engineers & Surveyors
MANKATO, MN FAIRMONT, MN SLEEPY EYE, MN BURNSVILLE, MN WILLMAR, MN CHASKA, MN RAMSEY, MN MAPLEWOOD, MN BAXTER, MN ROCHESTER, MN AMES, IA SPENCER, IA

RC PIPE CLASS "C" BEDDING

City of St. Francis

DATE: 07/2013
STD. DETAIL 4-000

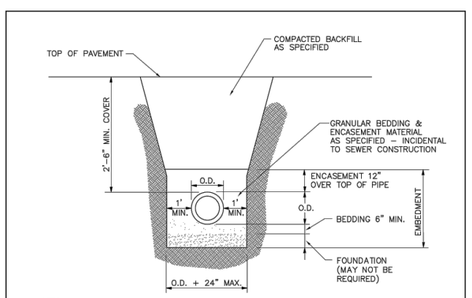

NOTES:
1. THIS NON-RIGID PIPE INSTALLATION DETAIL APPLIES ONLY TO STORM SEWER.
2. MAXIMUM PIPE DIAMETER IS 24".
3. PIPE MATERIAL REQUIREMENTS PER SPECIFICATIONS.
4. EMBEDMENT MATERIAL PER SPECIFICATIONS.
5. CONSTRUCTION REQUIREMENTS PER SPEC. 2451 MODIFIED SO THAT EMBEDMENT MATERIAL IS COMPACTED IN UNIFORM LIFTS, 8" OR LESS IN DEPTH, LOOSE MEASURE, TO 95% STANDARD PROCTOR DENSITY FROM THE BEDDING TO A MIN. DEPTH OF AT LEAST 12" ABOVE THE CROWN OF THE PIPE.
6. TRENCH WIDTH PER ASTM D2321 EXCEPT AS MODIFIED TO PROVIDE A MINIMUM OF 1-FOOT ON EACH SIDE OF THE PIPE TO ALLOW FOR COMPACTION.

PVC STORM SEWER TRENCH DETAIL
NOT TO SCALE

Y:\STFR\2013 Details\STFR_4-002.dwg

BOLTON & MENK, INC.
Consulting Engineers & Surveyors
MANKATO, MN FAIRMONT, MN SLEEPY EYE, MN BURNSVILLE, MN WILLMAR, MN CHASKA, MN RAMSEY, MN MAPLEWOOD, MN BAXTER, MN ROCHESTER, MN AMES, IA SPENCER, IA

PVC STORM SEWER TRENCH DETAIL

City of St. Francis

DATE: 07/2013
STD. DETAIL 4-002

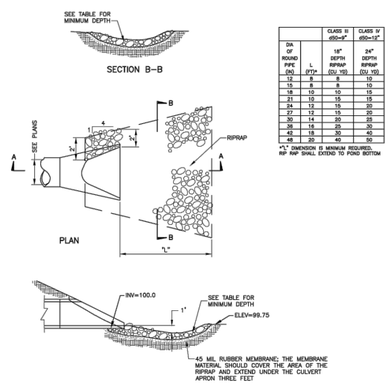

	CLASS II ø50-8"	CLASS IV ø50-12"	
DIA OF ROUND PIPE (IN)	L (FT)*	18" DEPTH RIPRAP (CU YD)	24" DEPTH RIPRAP (CU YD)
12	8	8	10
15	8	8	10
18	10	10	15
21	10	15	15
24	12	15	20
27	12	15	20
30	14	20	25
36	18	20	30
42	18	30	40
48	20	40	50

*"L" DIMENSION B MINIMUM REQUIRED. RIP RAP SHALL EXTEND TO POND BOTTOM

RIPRAP AT RCP CULVERT END
NOT TO SCALE

Y:\STFR\2013 Details\STFR_3-600.dwg

BOLTON & MENK, INC.
Consulting Engineers & Surveyors
MANKATO, MN FAIRMONT, MN SLEEPY EYE, MN BURNSVILLE, MN WILLMAR, MN CHASKA, MN RAMSEY, MN MAPLEWOOD, MN BAXTER, MN ROCHESTER, MN AMES, IA SPENCER, IA

RIPRAP AT RCP CULVERT END

City of St. Francis

DATE: 07/2013
STD. DETAIL 3-600

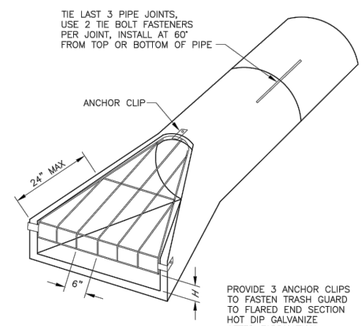

TRASH GUARD SIZES			
PIPE SIZE	BARS	"H"	BOLTS
12"–18"	3/4"ø	4"	5/8"
21"–42"	1"ø	6"	3/4"
42"–72"	1 1/4"ø	12"	1"

RC APRON TRASH RACK
(STEEL BARS)
NOT TO SCALE

Y:\STFR\2013 Details\STFR_4-601.dwg

BOLTON & MENK, INC.
Consulting Engineers & Surveyors
MANKATO, MN FAIRMONT, MN SLEEPY EYE, MN BURNSVILLE, MN WILLMAR, MN CHASKA, MN RAMSEY, MN MAPLEWOOD, MN BAXTER, MN ROCHESTER, MN AMES, IA SPENCER, IA

RC APRON TRASH RACK (STEEL BARS)

City of St. Francis

DATE: 07/2013
STD. DETAIL 4-601

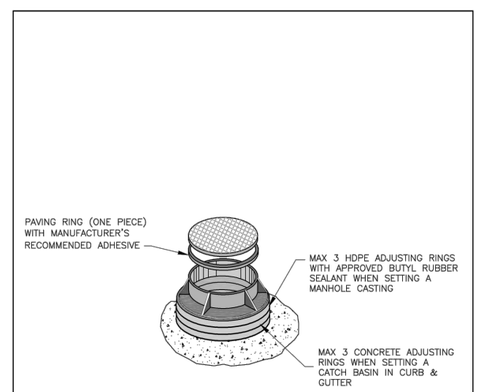

NOTE: A FIVE HUNDRED DOLLAR ($500) PENALTY WILL BE ENFORCED FOR EACH CASTING NOT PROPERLY ADJUSTED REQUIRING A PATCH IN THE BITUMINOUS WEARING COURSE.

CASTING & GRADE ADJUSTMENTS–STORM SEWER
NOT TO SCALE

Y:\STFR\2013 Details\STFR_4-700.dwg

BOLTON & MENK, INC.
Consulting Engineers & Surveyors
MANKATO, MN FAIRMONT, MN SLEEPY EYE, MN BURNSVILLE, MN WILLMAR, MN CHASKA, MN RAMSEY, MN MAPLEWOOD, MN BAXTER, MN ROCHESTER, MN AMES, IA SPENCER, IA

CASTING AND GRADE ADJUSTMENT RING DETAIL–STORM

City of St. Francis

DATE: 07/2013
STD. DETAIL 4-700

I HEREBY CERTIFY THAT THIS PLAN, SPECIFICATION, OR REPORT WAS PREPARED BY ME OR UNDER MY DIRECT SUPERVISION AND THAT I AM A DULY LICENSED PROFESSIONAL ENGINEER UNDER THE LAWS OF THE STATE OF MINNESOTA.

NAME

DATE 5/18/2023 LIC. NO. 15051

REV	REVISION DESCRIPTION	DWN	APP	REV DATE
1	Comments from City	MPJ	DJJ	5/18/2023

JOHNSON ENGINEERING GROUP
PO Box 384
Windom, MN 56101
(507) 832-8450

DWN BY	CHK'D	APP'D
MPJ	MPJ	DJJ

DWG DATE 3/17/2023
SCALE N/A

PROJECT Turtle Ponds 6th Addition
CLIENT BlueWaters Companies, Inc
17029 Vickers Street NE
Ham Lake, MN 55304

SHEET TITLE Typical Details Storm Sewer

PROJECT NO.	SHEET NO.	REV NO.
0093-01	G-204	1

C:\Users\mpjoh\Johnson Engineering Dropbox\Johnson Engineering Group\Drafting\0093 BlueWaters Companies\01 Turtle Ponds 6th Addition\CAD\G-Details\Typical Details.dwg 2:39 AM

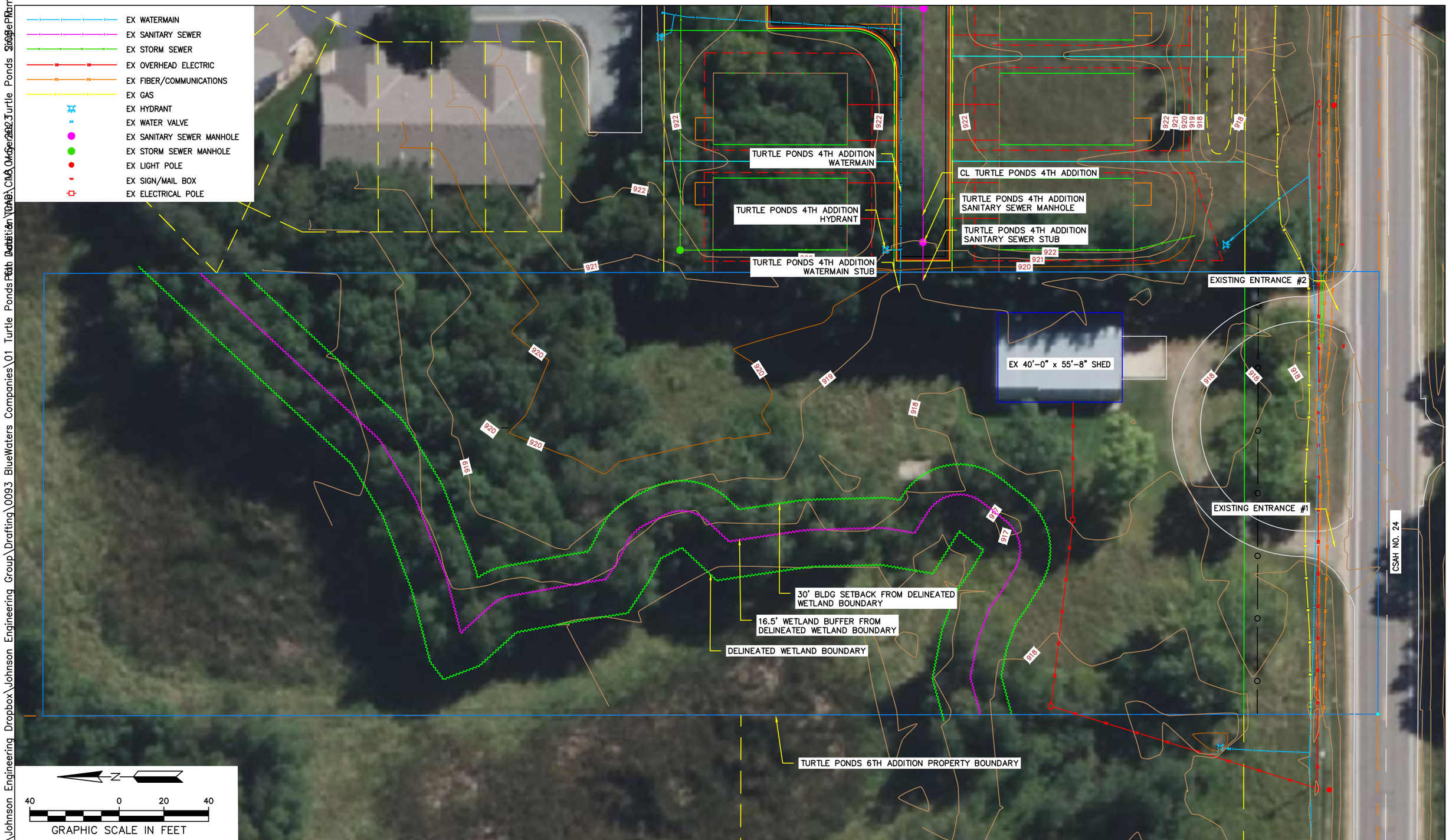

I HEREBY CERTIFY THAT THIS PLAN, SPECIFICATION, OR REPORT WAS PREPARED BY ME OR UNDER MY DIRECT SUPERVISION AND THAT I AM A DULY LICENSED PROFESSIONAL ENGINEER UNDER THE LAWS OF THE STATE OF MINNESOTA.

NAME

DATE 5/18/2023 LIC. NO. 15051

REV	REVISION DESCRIPTION	DWN	APP	REV DATE
1	Comments from City	MPJ	DJJ	5/18/2023

JOHNSON ENGINEERING GROUP
PO Box 384
Windom, MN 56101
(507) 832-8450

DWN BY	CHK'D	APP'D
MPJ	MPJ	DJJ

DWG DATE 3/17/2023

SCALE 1"=40'

PROJECT Turtle Ponds 6th Addition

CLIENT BlueWaters Companies, Inc
17029 Vickers Street NE
Ham Lake, MN 55304

SHEET TITLE Existing Conditions Plan

PROJECT NO.	SHEET NO.	REV NO.
0093-01	C-101	1

C:\Users\mpjoh\Johnson Engineering Dropbox\Johnson Engineering Group\Drafting\0093 BlueWaters Companies\01 Turtle Ponds 6th Addition\Turtle Ponds 6th Addition CMA 04-Sep-2022 Turtle Ponds 6th Addition Family Stu

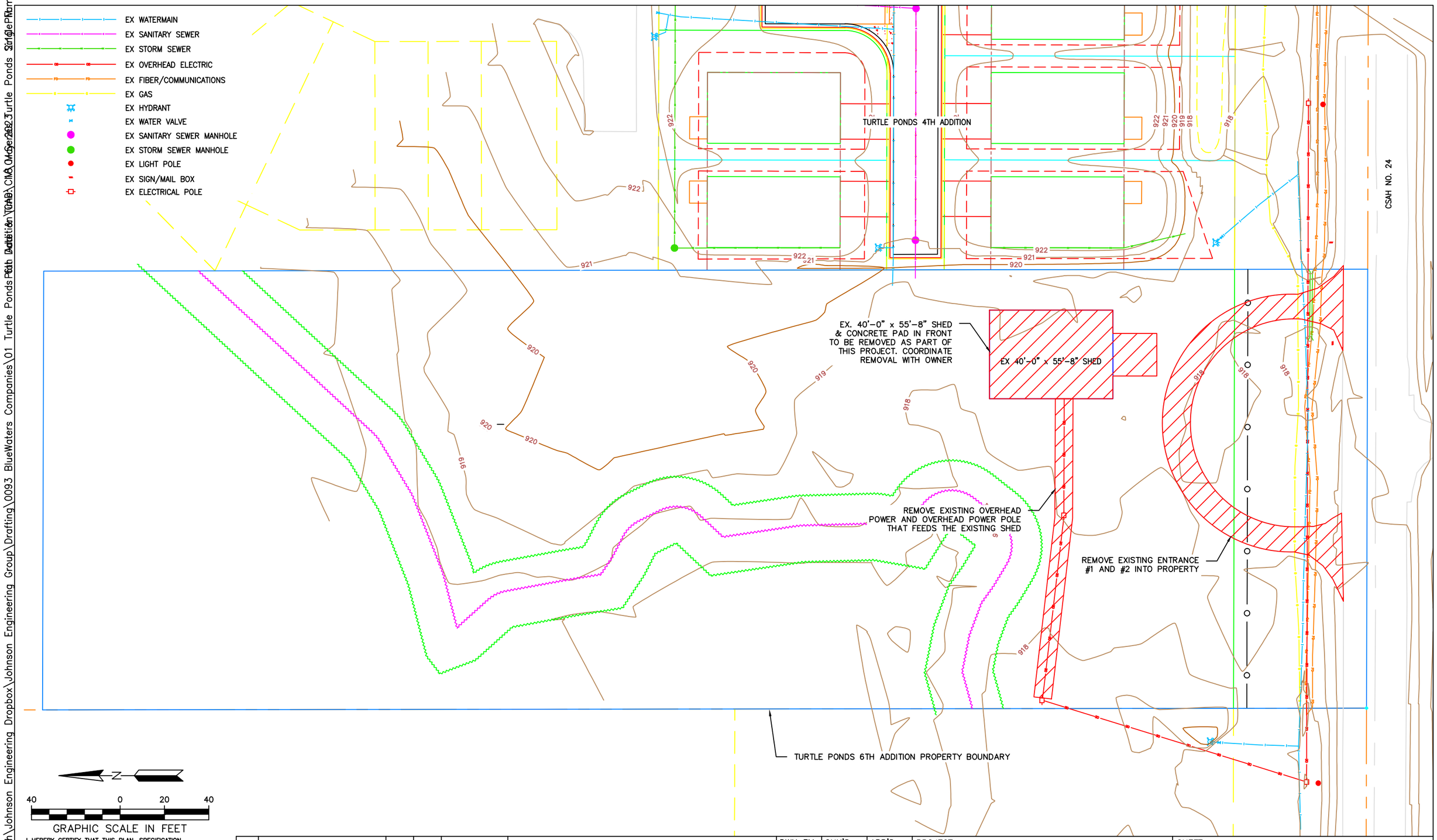

I HEREBY CERTIFY THAT THIS PLAN, SPECIFICATION, OR REPORT WAS PREPARED BY ME OR UNDER MY DIRECT SUPERVISION AND THAT I AM A DULY LICENSED PROFESSIONAL ENGINEER UNDER THE LAWS OF THE STATE OF MINNESOTA.

NAME

DATE 5/18/2023 LIC. NO. 15051

REV	REVISION DESCRIPTION	DWN	APP	REV DATE
1	Comments from City	MPJ	DJJ	5/18/2023

JOHNSON ENGINEERING GROUP

PO Box 384
Windom, MN 56101
(507) 832-8450

DWN BY	CHK'D	APP'D
MPJ	MPJ	DJJ

DWG DATE 3/17/2023

SCALE 1"=40'

PROJECT Turtle Ponds 6th Addition

CLIENT BlueWaters Companies, Inc
17029 Vickers Street NE
Ham Lake, MN 55304

SHEET TITLE Removal Plan

PROJECT NO.	SHEET NO.	REV NO.
0093-01	C-102	1

C:\Users\mpjoh\Johnson Engineering Dropbox\Johnson Engineering Group\Drafting\0093 BlueWaters Companies\01 Turtle Ponds 6th Addition\CAD\C-102 Turtle Ponds 6th Addition Family.dwg

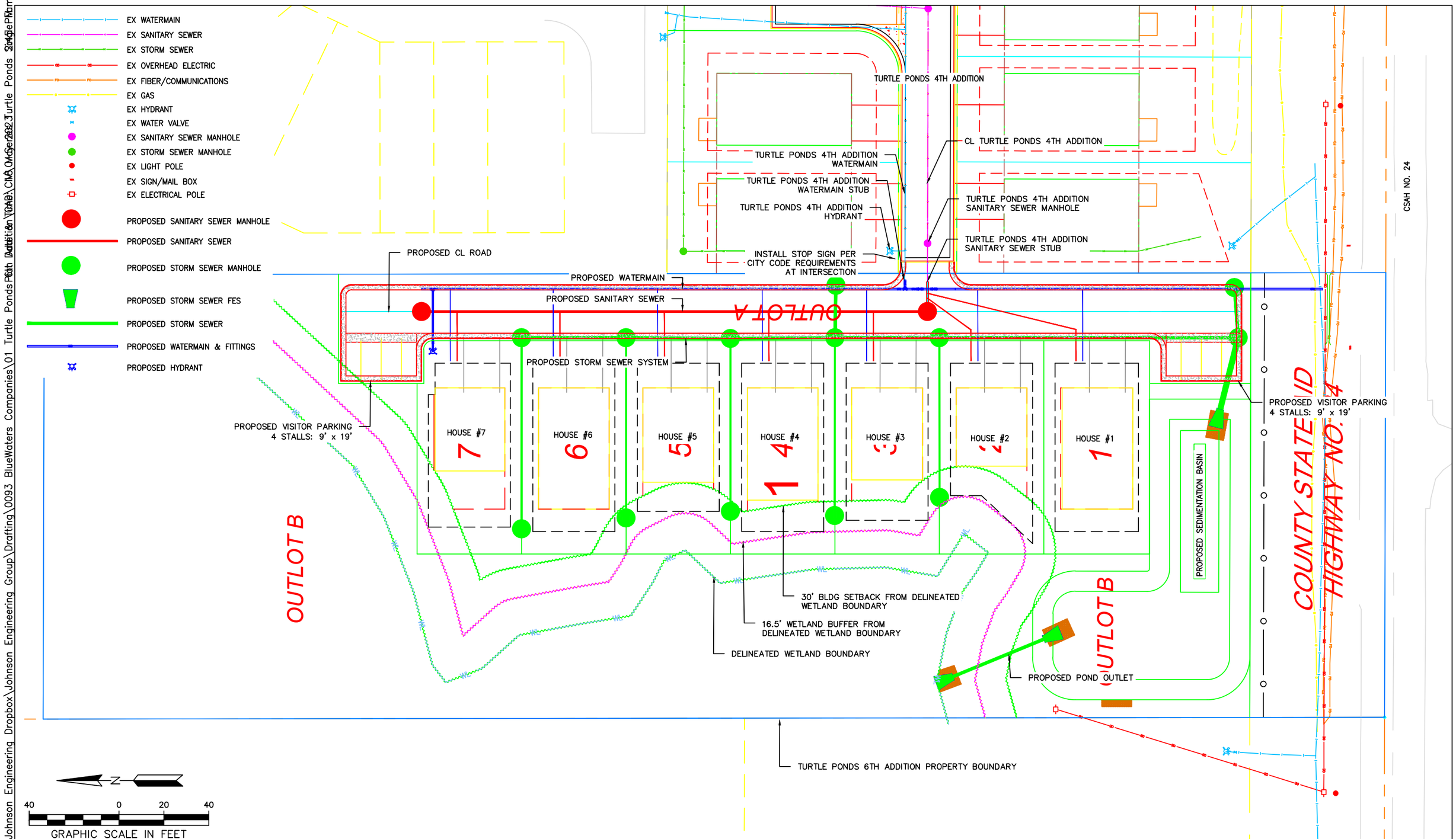

I HEREBY CERTIFY THAT THIS PLAN, SPECIFICATION, OR REPORT WAS PREPARED BY ME OR UNDER MY DIRECT SUPERVISION AND THAT I AM A DULY LICENSED PROFESSIONAL ENGINEER UNDER THE LAWS OF THE STATE OF MINNESOTA.

NAME

DATE 5/18/2023 LIC. NO. 15051

REV	REVISION DESCRIPTION	DWN	APP	REV DATE
1	Comments from City	MPJ	DJJ	5/18/2023

JOHNSON ENGINEERING GROUP
PO Box 384
Windom, MN 56101
(507) 832-8450

DWN BY	CHK'D	APP'D
MPJ	MPJ	DJJ

DWG DATE 3/17/2023

SCALE 1"=40'

PROJECT Turtle Ponds 6th Addition

CLIENT BlueWaters Companies, Inc
17029 Vickers Street NE
Ham Lake, MN 55304

SHEET TITLE Proposed Site Plan

PROJECT NO.	SHEET NO.	REV NO.
0093-01	C-103	1

C:\Users\mpjoh\Johnson Engineering Dropbox\Johnson Engineering Group\Drafting\0093 BlueWaters Companies\01 Turtle Ponds 6th Addition\CAD\C103 Turtle Ponds 6th Family Site.dwg

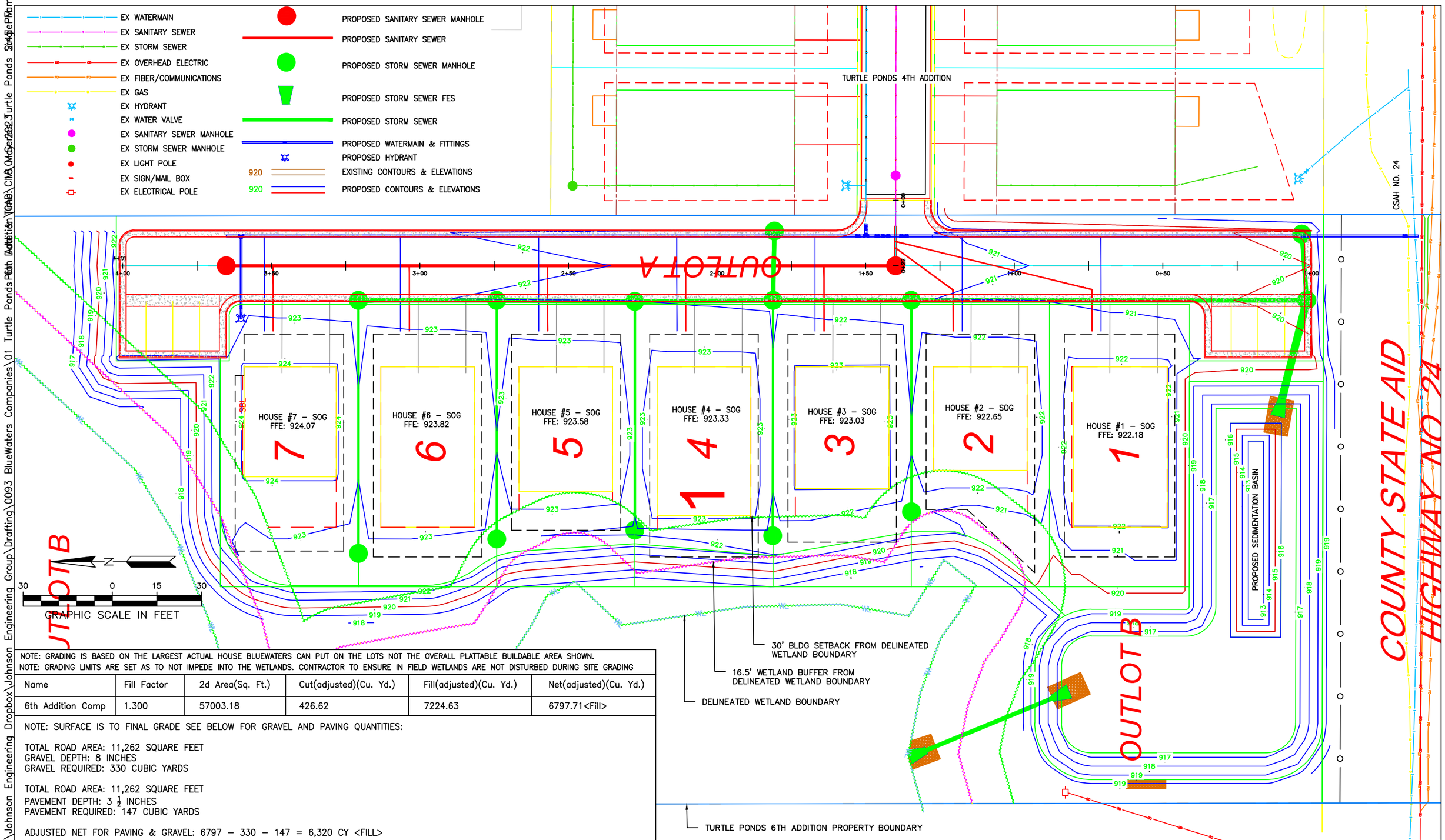

NOTE: GRADING IS BASED ON THE LARGEST ACTUAL HOUSE BLUEWATERS CAN PUT ON THE LOTS NOT THE OVERALL PLATTABLE BUILDABLE AREA SHOWN.
NOTE: GRADING LIMITS ARE SET AS TO NOT IMPEDE INTO THE WETLANDS. CONTRACTOR TO ENSURE IN FIELD WETLANDS ARE NOT DISTURBED DURING SITE GRADING

Name	Fill Factor	2d Area(Sq. Ft.)	Cut(adjusted)(Cu. Yd.)	Fill(adjusted)(Cu. Yd.)	Net(adjusted)(Cu. Yd.)
6th Addition Comp	1.300	57003.18	426.62	7224.63	6797.71<Fill>

NOTE: SURFACE IS TO FINAL GRADE SEE BELOW FOR GRAVEL AND PAVING QUANTITIES:

TOTAL ROAD AREA: 11,262 SQUARE FEET
GRAVEL DEPTH: 8 INCHES
GRAVEL REQUIRED: 330 CUBIC YARDS

TOTAL ROAD AREA: 11,262 SQUARE FEET
PAVEMENT DEPTH: 3 ½ INCHES
PAVEMENT REQUIRED: 147 CUBIC YARDS

ADJUSTED NET FOR PAVING & GRAVEL: 6797 – 330 – 147 = 6,320 CY <FILL>

I HEREBY CERTIFY THAT THIS PLAN, SPECIFICATION, OR REPORT WAS PREPARED BY ME OR UNDER MY DIRECT SUPERVISION AND THAT I AM A DULY LICENSED PROFESSIONAL ENGINEER UNDER THE LAWS OF THE STATE OF MINNESOTA.

NAME

DATE 5/18/2023 LIC. NO. 15051

REV	REVISION DESCRIPTION	DWN	APP	REV DATE
1	Comments from City	MPJ	DJJ	5/18/2023

JOHNSON ENGINEERING GROUP
PO Box 384
Windom, MN 56101
(507) 832-8450

DWN BY	CHK'D	APP'D
MPJ	MPJ	DJJ

DWG DATE 3/17/2023
SCALE 1"=30'

PROJECT Turtle Ponds 6th Addition
CLIENT BlueWaters Companies, Inc
17029 Vickers Street NE
Ham Lake, MN 55304

SHEET TITLE Overall Site Grading Plan
PROJECT NO. 0093-01
SHEET NO. C-104A
REV NO. 1

C:\Users\mpjoh\Johnson Engineering Dropbox\Johnson Engineering Group\Drafting\0093 BlueWaters Companies\01 Turtle Ponds 6th Addition\TP6A_C104A_Overall Site Grading Plan 2023-03-17 Turtle Ponds 6th Addition Family Study

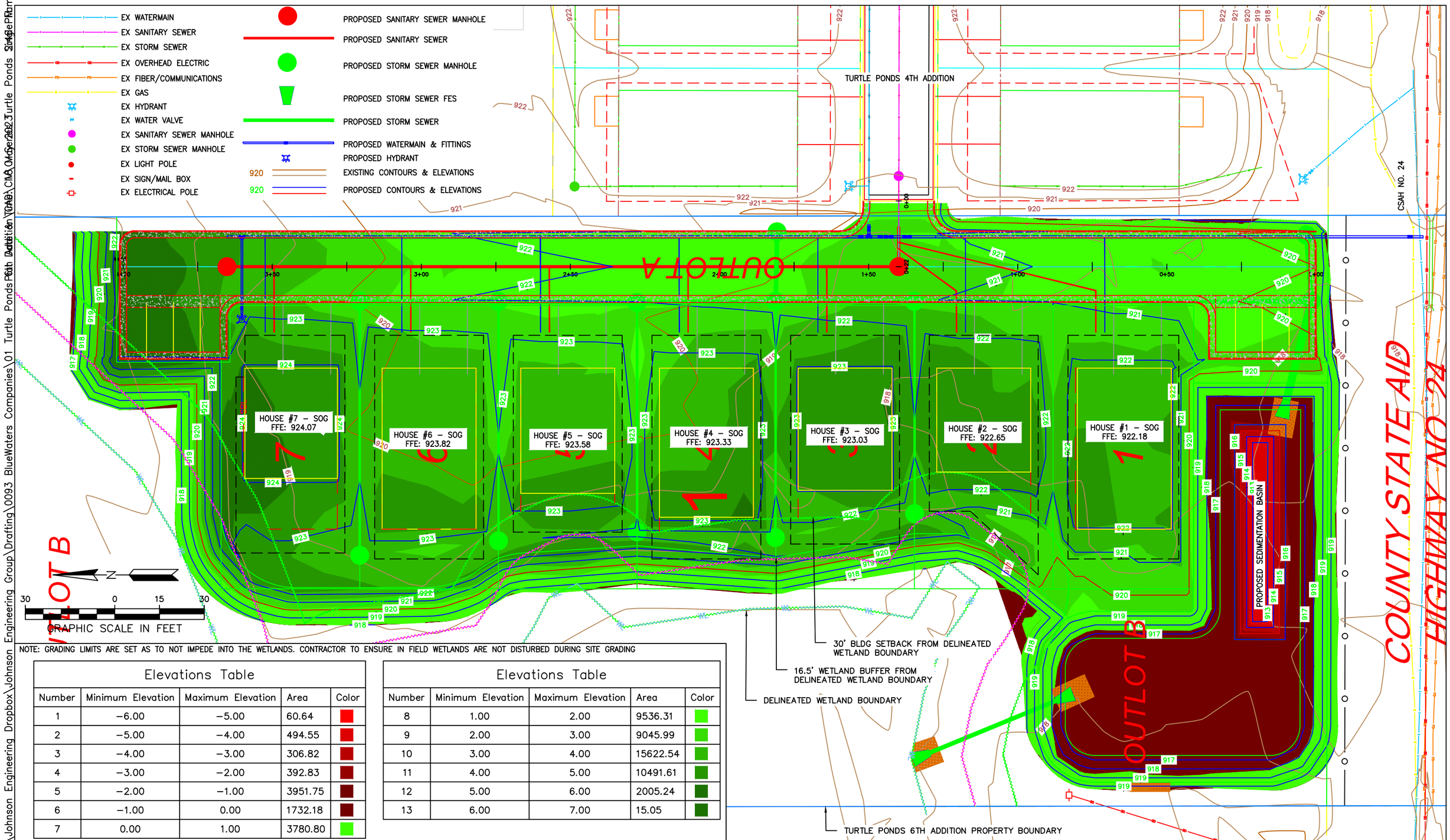

NOTE: GRADING LIMITS ARE SET AS TO NOT IMPEDE INTO THE WETLANDS. CONTRACTOR TO ENSURE IN FIELD WETLANDS ARE NOT DISTURBED DURING SITE GRADING

Elevations Table

Number	Minimum Elevation	Maximum Elevation	Area	Color
1	−6.00	−5.00	60.64	
2	−5.00	−4.00	494.55	
3	−4.00	−3.00	306.82	
4	−3.00	−2.00	392.83	
5	−2.00	−1.00	3951.75	
6	−1.00	0.00	1732.18	
7	0.00	1.00	3780.80	

Elevations Table

Number	Minimum Elevation	Maximum Elevation	Area	Color
8	1.00	2.00	9536.31	
9	2.00	3.00	9045.99	
10	3.00	4.00	15622.54	
11	4.00	5.00	10491.61	
12	5.00	6.00	2005.24	
13	6.00	7.00	15.05	

I HEREBY CERTIFY THAT THIS PLAN, SPECIFICATION, OR REPORT WAS PREPARED BY ME OR UNDER MY DIRECT SUPERVISION AND THAT I AM A DULY LICENSED PROFESSIONAL ENGINEER UNDER THE LAWS OF THE STATE OF MINNESOTA.

NAME

DATE 5/18/2023 LIC. NO. 15051

REV	REVISION DESCRIPTION	DWN	APP	REV DATE
1	Comments from City	MPJ	DJJ	5/18/2023

JOHNSON ENGINEERING GROUP
PO Box 384
Windom, MN 56101
(507) 832-8450

DWN BY	CHK'D	APP'D
MPJ	MPJ	DJJ

DWG DATE 3/17/2023

SCALE 1"=30'

PROJECT Turtle Ponds 6th Addition

CLIENT BlueWaters Companies, Inc
17029 Vickers Street NE
Ham Lake, MN 55304

SHEET TITLE Overall Site Grading Plan
ISO Grading Depths Map

PROJECT NO. 0093-01

SHEET NO. C-104B

REV NO. 1

C:\Users\mpjoh\Johnson Engineering Dropbox\Johnson Engineering Group\Drafting\0093 BlueWaters Companies\01 Turtle Ponds 6th Addition\CAD\C104B Turtle Ponds 6th Family Sta

EX WATERMAIN
EX SANITARY SEWER
EX STORM SEWER
EX OVERHEAD ELECTRIC
EX FIBER/COMMUNICATIONS
EX GAS
EX HYDRANT
EX WATER VALVE
EX SANITARY SEWER MANHOLE
EX STORM SEWER MANHOLE
EX LIGHT POLE
EX SIGN/MAIL BOX
EX ELECTRICAL POLE

PROPOSED SANITARY SEWER MANHOLE
PROPOSED SANITARY SEWER
PROPOSED STORM SEWER MANHOLE
PROPOSED STORM SEWER FES
PROPOSED STORM SEWER
PROPOSED WATERMAIN & FITTINGS
PROPOSED HYDRANT
920 EXISTING CONTOURS & ELEVATIONS
920 PROPOSED CONTOURS & ELEVATIONS

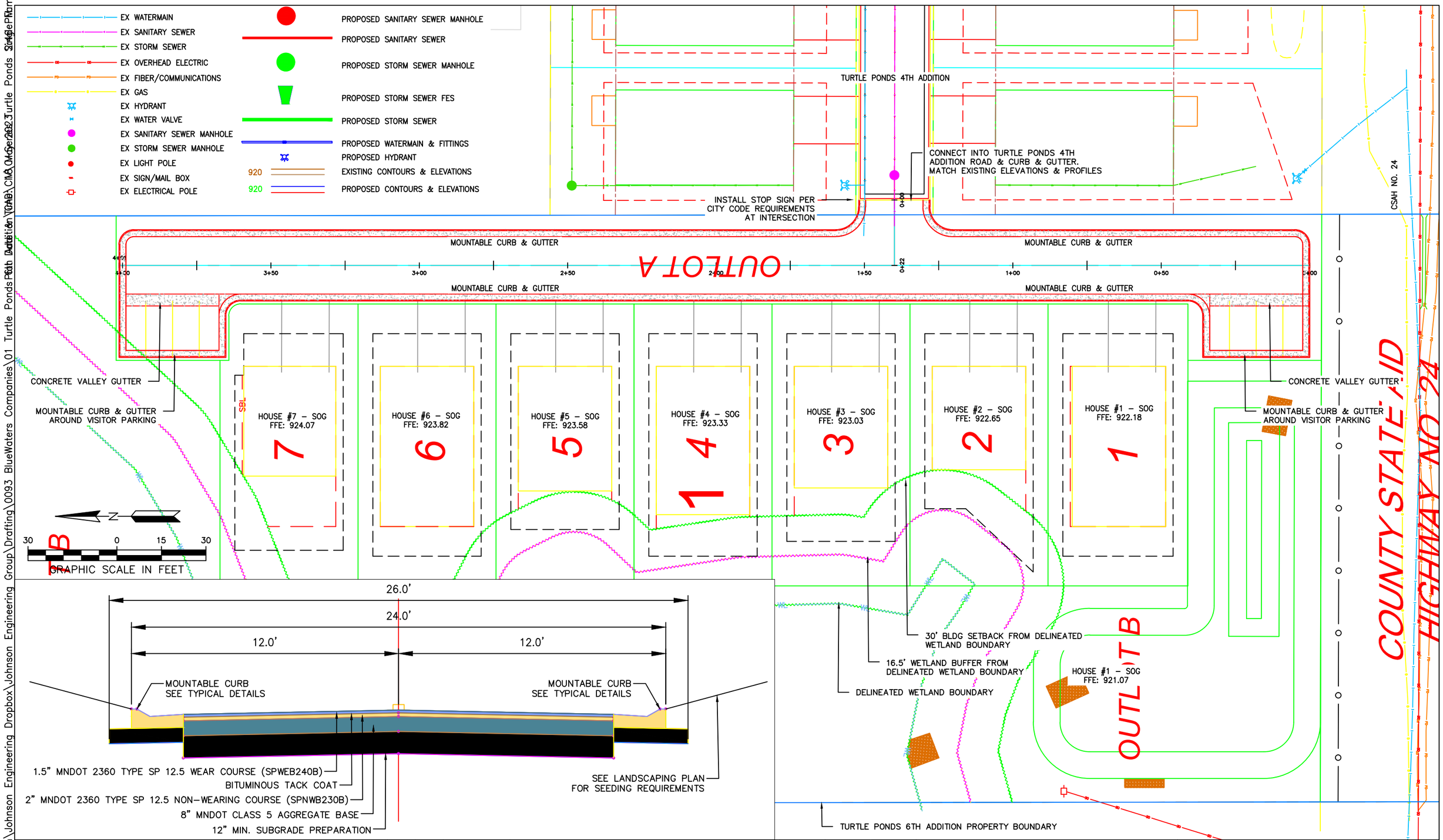

I HEREBY CERTIFY THAT THIS PLAN, SPECIFICATION, OR REPORT WAS PREPARED BY ME OR UNDER MY DIRECT SUPERVISION AND THAT I AM A DULY LICENSED PROFESSIONAL ENGINEER UNDER THE LAWS OF THE STATE OF MINNESOTA.

NAME

DATE 5/18/2023 LIC. NO. 15051

REV	REVISION DESCRIPTION	DWN	APP	REV DATE
1	Comments from City	MPJ	DJJ	5/18/2023

JOHNSON ENGINEERING GROUP
PO Box 384
Windom, MN 56101
(507) 832-8450

DWN BY	CHK'D	APP'D
MPJ	MPJ	DJJ

DWG DATE 3/17/2023
SCALE 1"=30'

PROJECT Turtle Ponds 6th Addition
CLIENT BlueWaters Companies, Inc
17029 Vickers Street NE
Ham Lake, MN 55304

SHEET TITLE Overall Road Plan
PROJECT NO. 0093-01
SHEET NO. C-105A
REV NO. 1

C:\Users\mpjoh\Johnson Engineering Dropbox\Johnson Engineering Group\Drafting\0093 BlueWaters Companies\01 Turtle Ponds 6th Addition\Turtle Ponds 6th Family Study\C105A Overall Road Plan

C:\Users\mpjoh\Johnson Engineering Dropbox\Johnson Engineering Group\Drafting\0093 BlueWaters Companies\01 Turtle Ponds 6th Addition\CIVIL\C105 Turtle Ponds 6th Family St

Turtle Ponds Main Road PROFILE

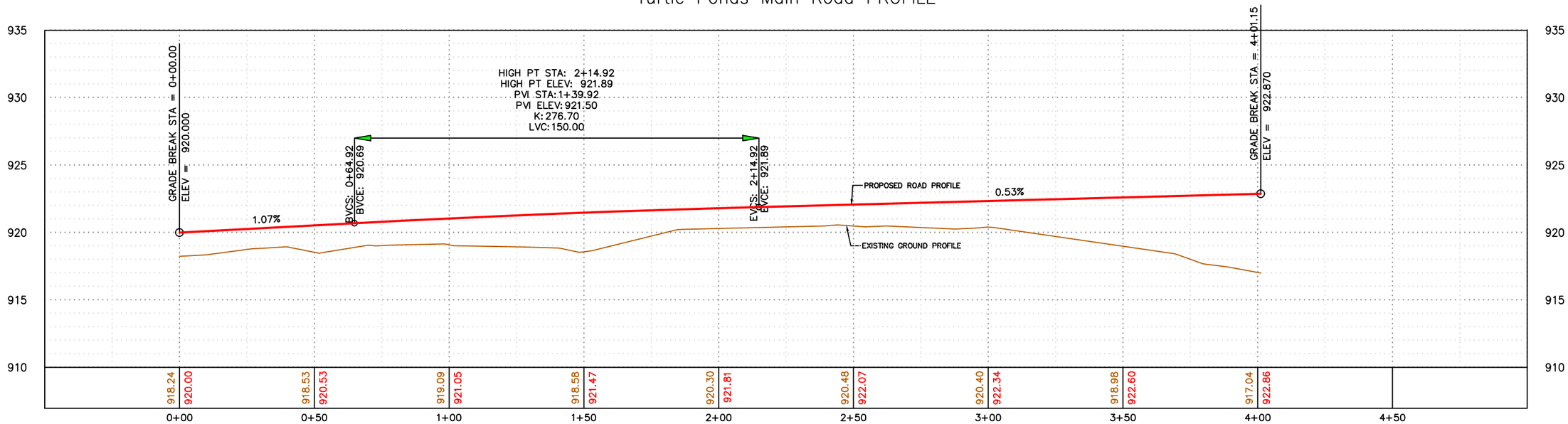

Turtle Ponds Connector Road PROFILE

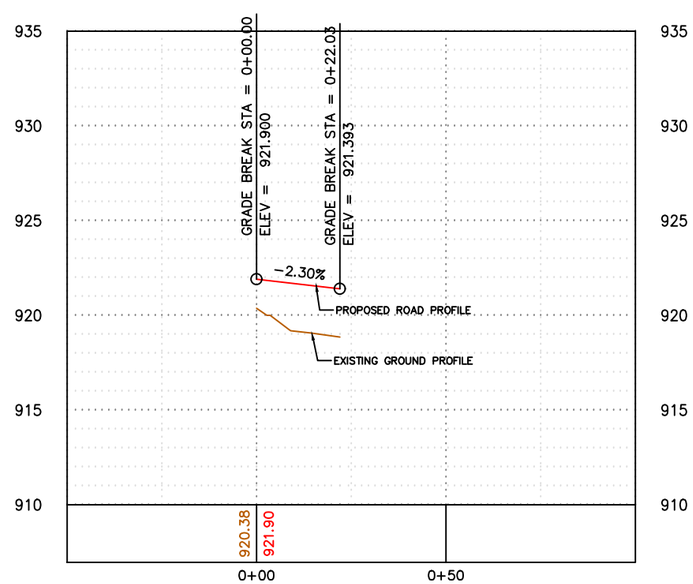

40 0 20 40

GRAPHIC SCALE IN FEET

I HEREBY CERTIFY THAT THIS PLAN, SPECIFICATION, OR REPORT WAS PREPARED BY ME OR UNDER MY DIRECT SUPERVISION AND THAT I AM A DULY LICENSED PROFESSIONAL ENGINEER UNDER THE LAWS OF THE STATE OF MINNESOTA.

NAME

DATE 5/18/2023 LIC. NO. 15051

REV	REVISION DESCRIPTION	DWN	APP	REV DATE
1	Comments from City	MPJ	DJJ	5/18/2023

JOHNSON ENGINEERING GROUP

PO Box 384
Windom, MN 56101
(507) 832-8450

DWN BY	CHK'D	APP'D
MPJ	MPJ	DJJ

DWG DATE 3/17/2023

SCALE 1"=40'

PROJECT Turtle Ponds 6th Addition

CLIENT BlueWaters Companies, Inc
17029 Vickers Street NE
Ham Lake, MN 55304

SHEET TITLE Road Profile Plan

PROJECT NO.	SHEET NO.	REV NO.
0093-01	C-105B	1

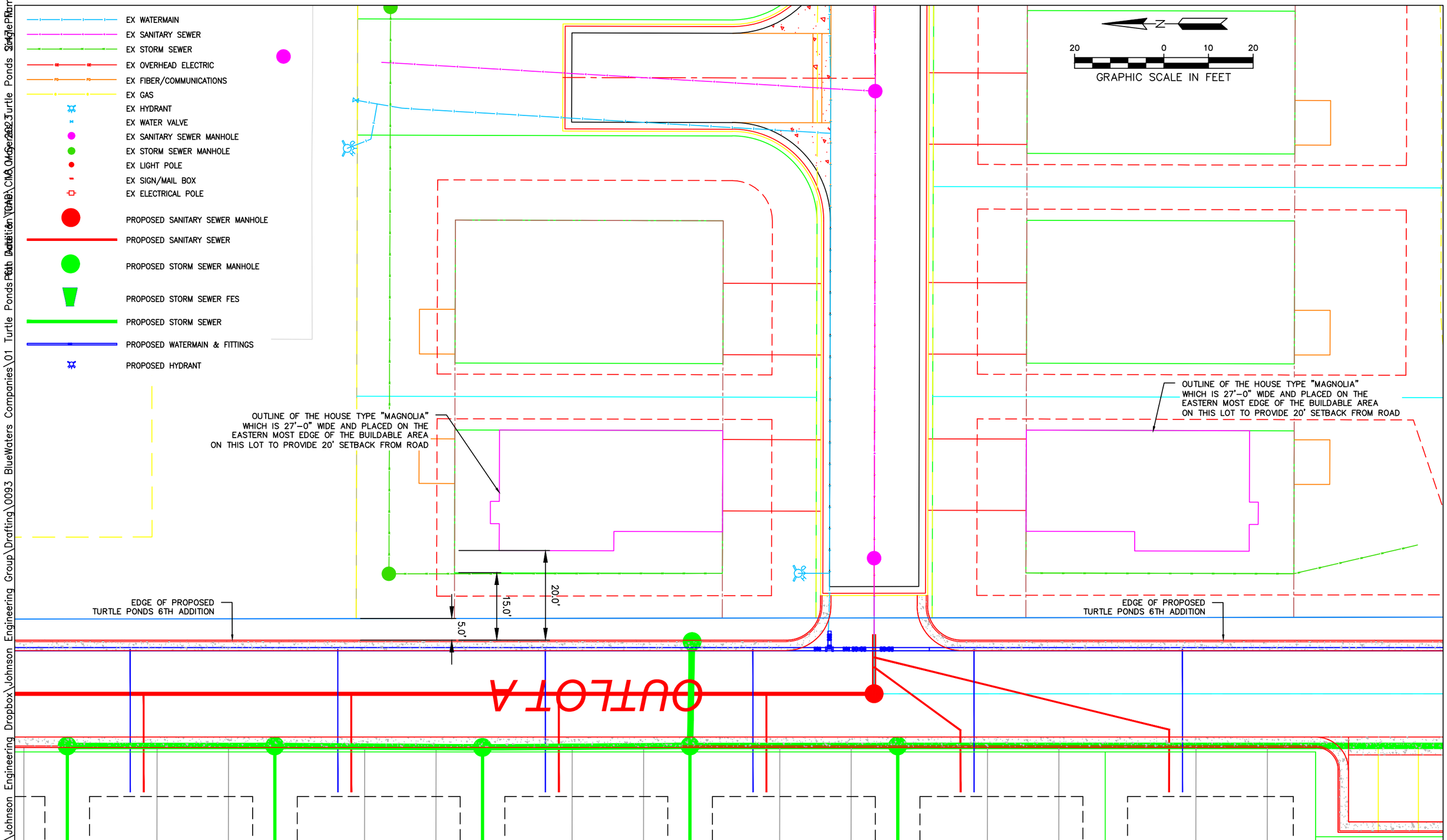

I HEREBY CERTIFY THAT THIS PLAN, SPECIFICATION, OR REPORT WAS PREPARED BY ME OR UNDER MY DIRECT SUPERVISION AND THAT I AM A DULY LICENSED PROFESSIONAL ENGINEER UNDER THE LAWS OF THE STATE OF MINNESOTA.

NAME

DATE 5/18/2023 LIC. NO. 15051

REV	REVISION DESCRIPTION	DWN	APP	REV DATE
1	Comments from City	MPJ	DJJ	5/18/2023

JOHNSON ENGINEERING GROUP

PO Box 384
Windom, MN 56101
(507) 832-8450

DWN BY	CHK'D	APP'D
MPJ	MPJ	DJJ

DWG DATE 3/17/2023

SCALE 1"=20'

PROJECT Turtle Ponds 6th Addition

CLIENT BlueWaters Companies, Inc
17029 Vickers Street NE
Ham Lake, MN 55304

SHEET TITLE Road Setback to Turtle Ponds 4th Addition

PROJECT NO.	SHEET NO.	REV NO.
0093-01	C-105C	1

C:\Users\mpjoh\Johnson Engineering Dropbox\Johnson Engineering Group\Drafting\0093 BlueWaters Companies\01 Turtle Ponds 6th Addition\Turtle Ponds 4th Addition\C105C.dwg Sep 2022 Turtle Ponds 6th Addition Family Study

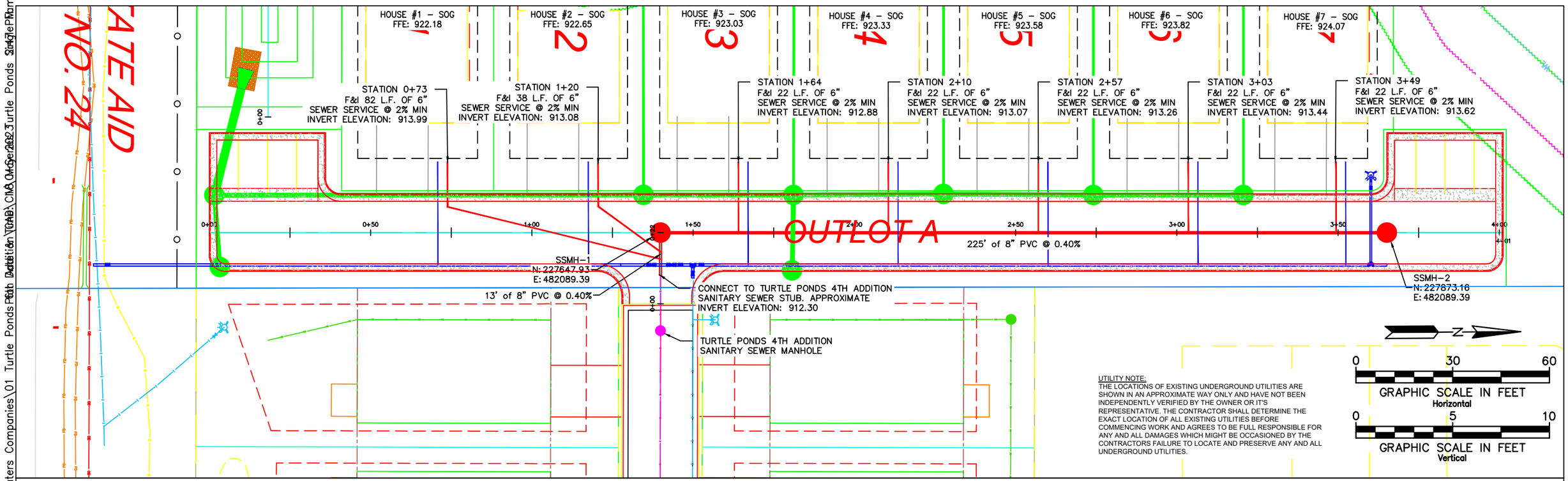

UTILITY NOTE:
THE LOCATIONS OF EXISTING UNDERGROUND UTILITIES ARE SHOWN IN AN APPROXIMATE WAY ONLY AND HAVE NOT BEEN INDEPENDENTLY VERIFIED BY THE OWNER OR IT'S REPRESENTATIVE. THE CONTRACTOR SHALL DETERMINE THE EXACT LOCATION OF ALL EXISTING UTILITIES BEFORE COMMENCING WORK AND AGREES TO BE FULL RESPONSIBLE FOR ANY AND ALL DAMAGES WHICH MIGHT BE OCCASIONED BY THE CONTRACTORS FAILURE TO LOCATE AND PRESERVE ANY AND ALL UNDERGROUND UTILITIES.

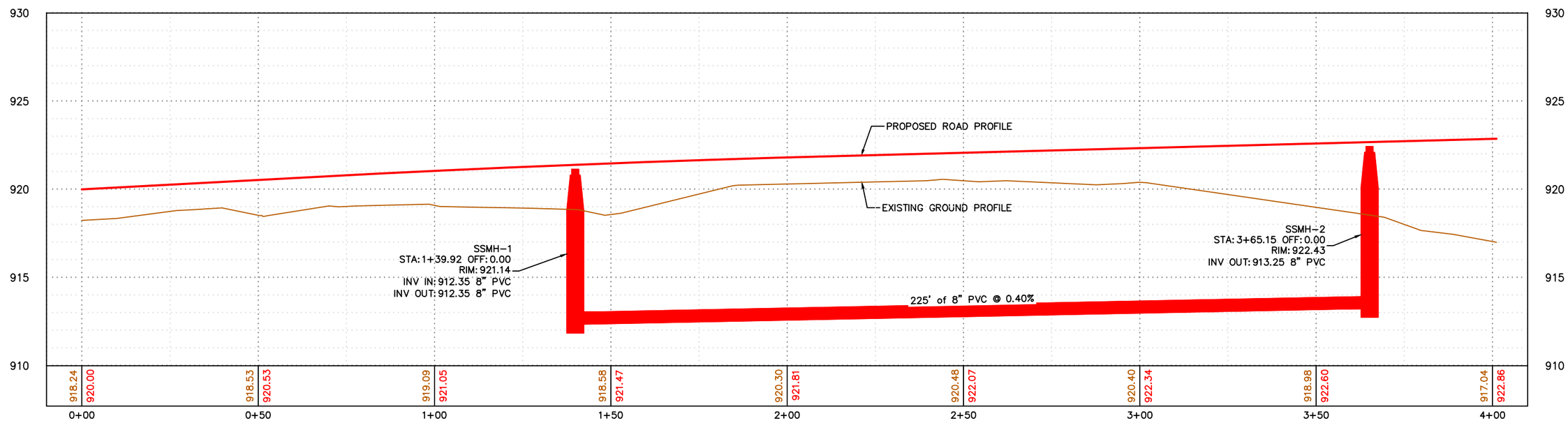

I HEREBY CERTIFY THAT THIS PLAN, SPECIFICATION, OR REPORT WAS PREPARED BY ME OR UNDER MY DIRECT SUPERVISION AND THAT I AM A DULY LICENSED PROFESSIONAL ENGINEER UNDER THE LAWS OF THE STATE OF MINNESOTA.

NAME

DATE 5/18/2023 LIC. NO. 15051

REV	REVISION DESCRIPTION	DWN	APP	REV DATE
1	Comments from City	MPJ	DJJ	5/18/2023

JOHNSON ENGINEERING GROUP
PO Box 384
Windom, MN 56101
(507) 832–8450

DWN BY	CHK'D	APP'D
MPJ	MPJ	DJJ

DWG DATE 3/17/2023
SCALE See Scales

PROJECT Turtle Ponds 6th Addition
CLIENT BlueWaters Companies, Inc
17029 Vickers Street NE
Ham Lake, MN 55304

SHEET TITLE Sanitary Sewer Plan & Profile

PROJECT NO.	SHEET NO.	REV NO.
0093–01	C–106	1

C:\Users\mpjoh\Johnson Engineering Dropbox\Johnson Engineering Group\Drafting\0093 BlueWaters Companies\01 Turtle Ponds 6th Addition\Turtle Ponds 6th Addition Sanitary Sewer.dwg

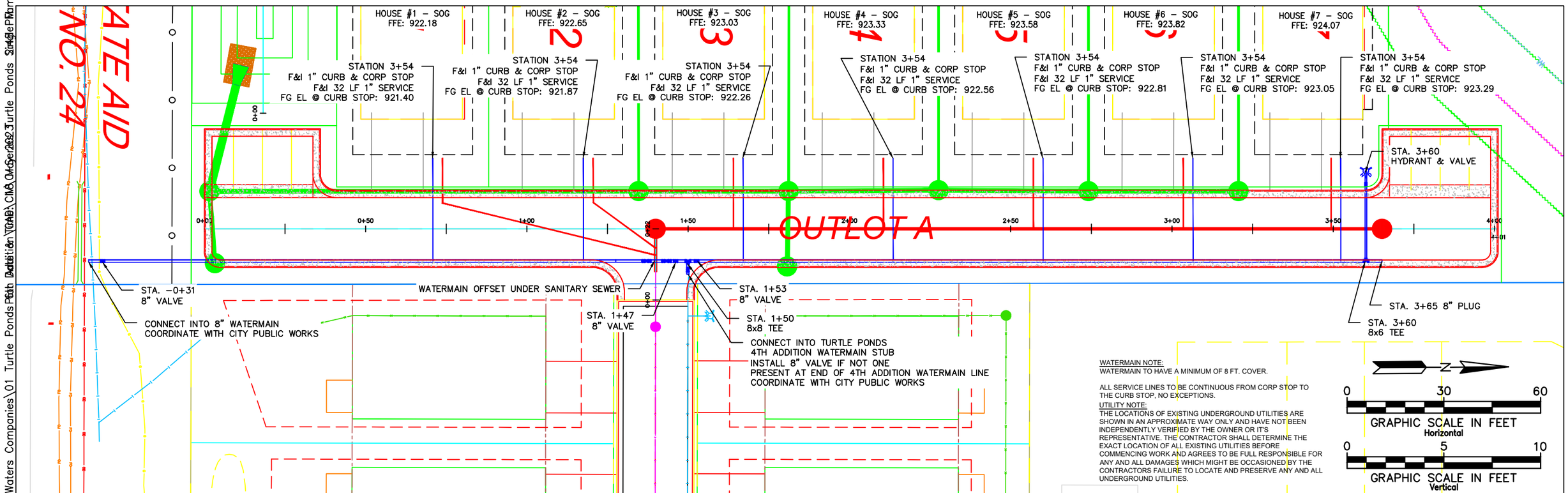

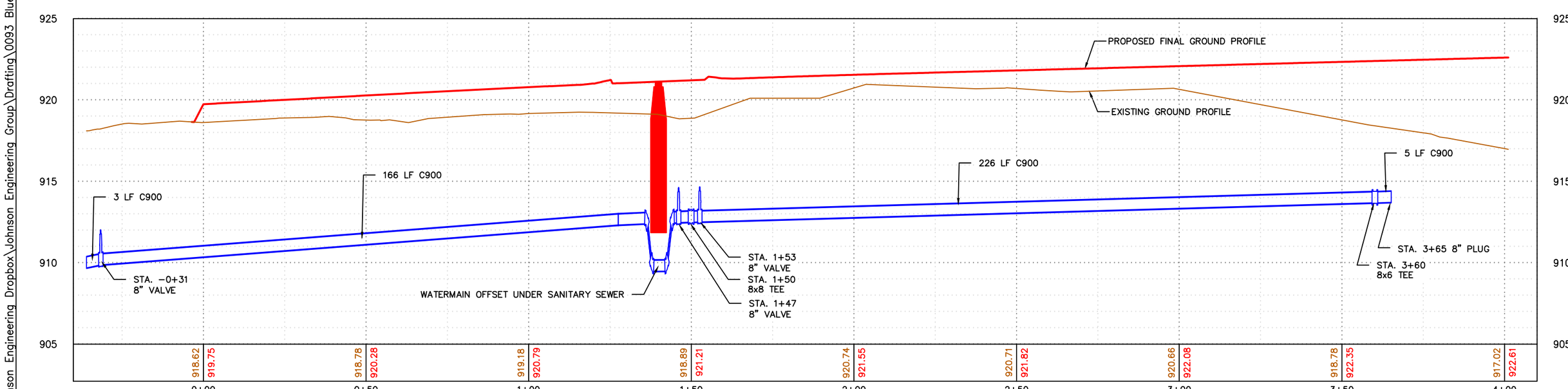

I HEREBY CERTIFY THAT THIS PLAN, SPECIFICATION, OR REPORT WAS PREPARED BY ME OR UNDER MY DIRECT SUPERVISION AND THAT I AM A DULY LICENSED PROFESSIONAL ENGINEER UNDER THE LAWS OF THE STATE OF MINNESOTA.

NAME

DATE 5/18/2023 LIC. NO. 15051

REV	REVISION DESCRIPTION	DWN	APP	REV DATE
1	Comments from City	MPJ	DJJ	5/18/2023

JOHNSON ENGINEERING GROUP
PO Box 384
Windom, MN 56101
(507) 832-8450

DWN BY	CHK'D	APP'D
MPJ	MPJ	DJJ

DWG DATE 3/17/2023

SCALE See Scales

PROJECT Turtle Ponds 6th Addition

CLIENT BlueWaters Companies, Inc
17029 Vickers Street NE
Ham Lake, MN 55304

SHEET TITLE Watermain Plan & Profile

PROJECT NO.	SHEET NO.	REV NO.
0093–01	C–107	1

C:\Users\mpjoh\Johnson Engineering Dropbox\Johnson Engineering Group\Drafting\0093 BlueWaters Companies\01 Turtle Ponds 6th Addition\Turtle Ponds 6th Addition C107.dwg Oct 2022 Turtle Ponds 6th Addition

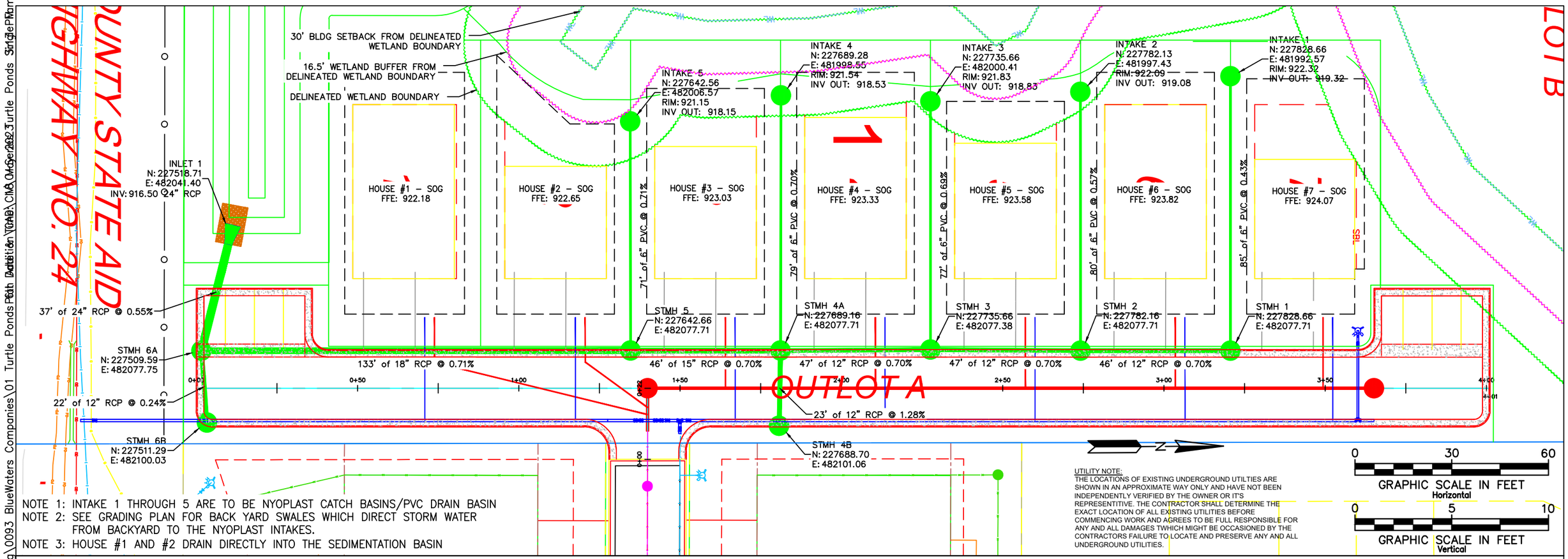

NOTE 1: INTAKE 1 THROUGH 5 ARE TO BE NYOPLAST CATCH BASINS/PVC DRAIN BASIN
NOTE 2: SEE GRADING PLAN FOR BACK YARD SWALES WHICH DIRECT STORM WATER FROM BACKYARD TO THE NYOPLAST INTAKES.
NOTE 3: HOUSE #1 AND #2 DRAIN DIRECTLY INTO THE SEDIMENTATION BASIN

UTILITY NOTE:
THE LOCATIONS OF EXISTING UNDERGROUND UTILTIES ARE SHOWN IN AN APPROXIMATE WAY ONLY AND HAVE NOT BEEN INDEPENDENTLY VERIFIED BY THE OWNER OR IT'S REPRESENTITIVE. THE CONTRACTOR SHALL DETERMINE THE EXACT LOCATION OF ALL EXISTING UTILITIES BEFORE COMMENCING WORK AND AGREES TO BE FULL RESPONSIBLE FOR ANY AND ALL DAMAGES TWHICH MIGHT BE OCCASIONED BY THE CONTRACTORS FAILURE TO LOCATE AND PRESERVE ANY AND ALL UNDERGROUND UTILITIES.

0 30 60
GRAPHIC SCALE IN FEET
Horizontal

0 5 10
GRAPHIC SCALE IN FEET
Vertical

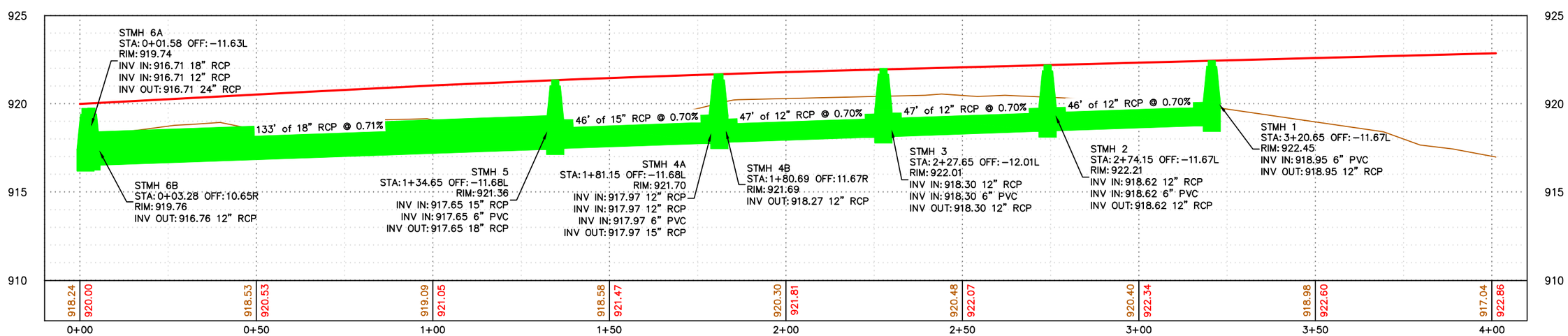

I HEREBY CERTIFY THAT THIS PLAN, SPECIFICATION, OR REPORT WAS PREPARED BY ME OR UNDER MY DIRECT SUPERVISION AND THAT I AM A DULY LICENSED PROFESSIONAL ENGINEER UNDER THE LAWS OF THE STATE OF MINNESOTA.

NAME

DATE 5/18/2023 LIC. NO. 15051

REV	REVISION DESCRIPTION	DWN	APP	REV DATE
1	Comments from City	MPJ	DJJ	5/18/2023

JOHNSON ENGINEERING GROUP
PO Box 384
Windom, MN 56101
(507) 832-8450

DWN BY	CHK'D	APP'D	PROJECT	Turtle Ponds 6th Addition	SHEET TITLE	Storm Sewer Plan & Profile
MPJ	MPJ	DJJ				
DWG DATE 3/17/2023			CLIENT	BlueWaters Companies, Inc 17029 Vickers Street NE Ham Lake, MN 55304	PROJECT NO. 0093-01	SHEET NO. C-108 / REV NO. 1
SCALE See Scales						

C:\Users\mpjoh\Johnson Engineering Dropbox\Johnson Engineering Group\Drafting\0093 BlueWaters Companies\01 Turtle Ponds 6th Addition\Turtle Ponds 6th Addition C108.dwg, Oct 06, 2022 - 3:17pm, Michael Johnson

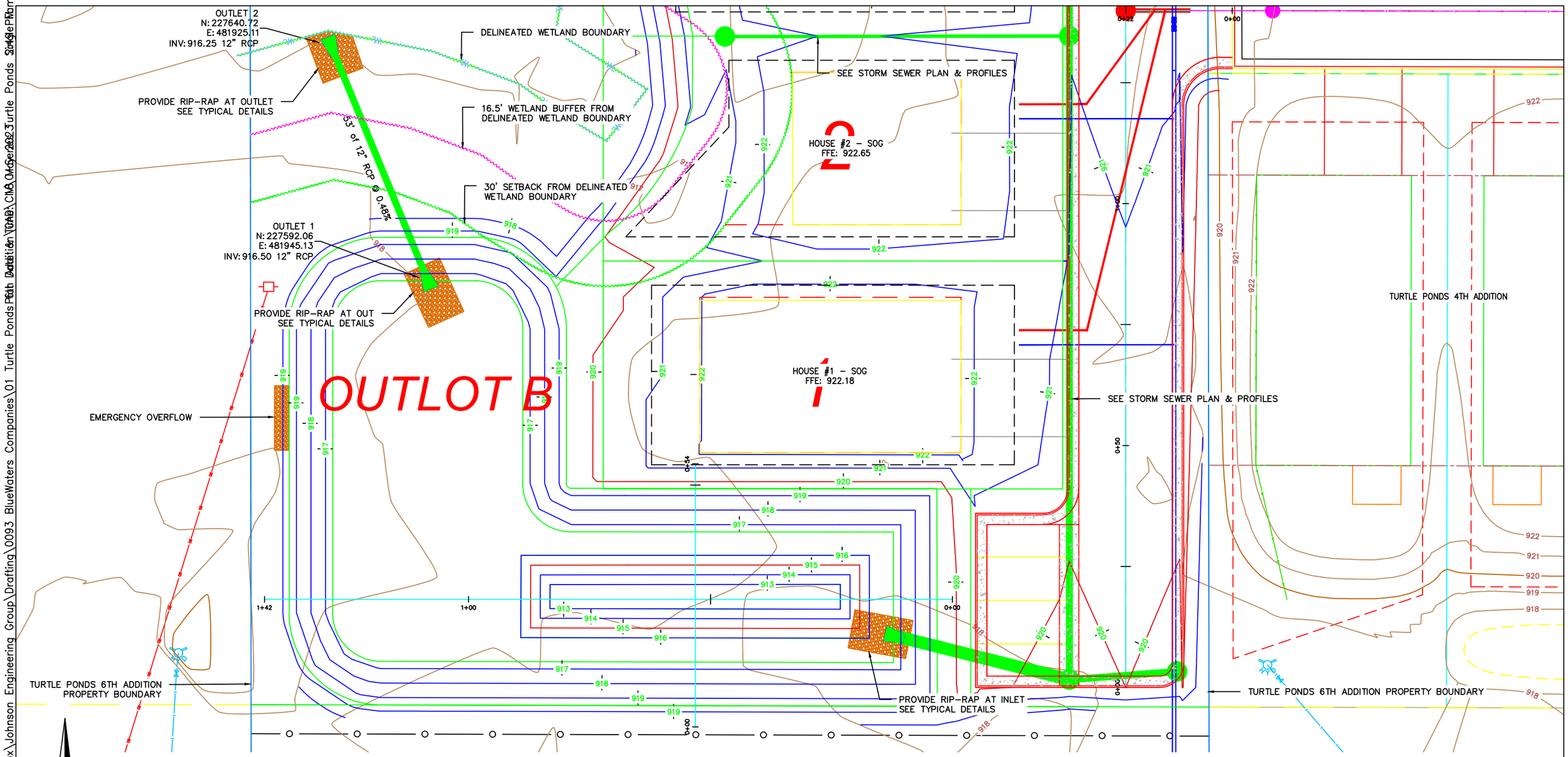

POND INFORMATION:

DISTURBED ACRES: 1.14 ACRES
REQUIRED STORAGE PER ACRE DISTURBED: 1800 CF
REQUIRED PERMANENT STORAGE: 1.14 ACRES x 1800 CF = 2,061 CF
PERMANENT STORAGE PROVIDED: 2,140 CF

NORMAL WATER LEVEL: 916.50
100 YEAR STORM ELEVATION: 917.85

SEE HYDROCAD MODEL & SWPPP REPORT FOR ADDITIONAL DETAILS

I HEREBY CERTIFY THAT THIS PLAN, SPECIFICATION, OR REPORT WAS PREPARED BY ME OR UNDER MY DIRECT SUPERVISION AND THAT I AM A DULY LICENSED PROFESSIONAL ENGINEER UNDER THE LAWS OF THE STATE OF MINNESOTA.

NAME

DATE 5/18/2023 LIC. NO. 15051

REV	REVISION DESCRIPTION	DWN	APP	REV DATE
1	Comments from City	MPJ	DJJ	5/18/2023

JOHNSON ENGINEERING GROUP
PO Box 384
Windom, MN 56101
(507) 832-8450

DWN BY	CHK'D	APP'D
MPJ	MPJ	DJJ

DWG DATE 3/17/2023
SCALE 1"=30'

PROJECT Turtle Ponds 6th Addition
CLIENT BlueWaters Companies, Inc
17029 Vickers Street NE
Ham Lake, MN 55304

SHEET TITLE Storm Water Pond Plan

PROJECT NO.	SHEET NO.	REV NO.
0093-01	C-109A	1

C:\Users\mpjoh\Johnson Engineering Dropbox\Johnson Engineering Group\Drafting\0093 BlueWaters Companies\01 Turtle Ponds 4th Addition\CAD\C-109A Turtle Ponds 6th Family Stormwater Pond.dwg

Turtle Ponds Detention Pond 1 PROFILE

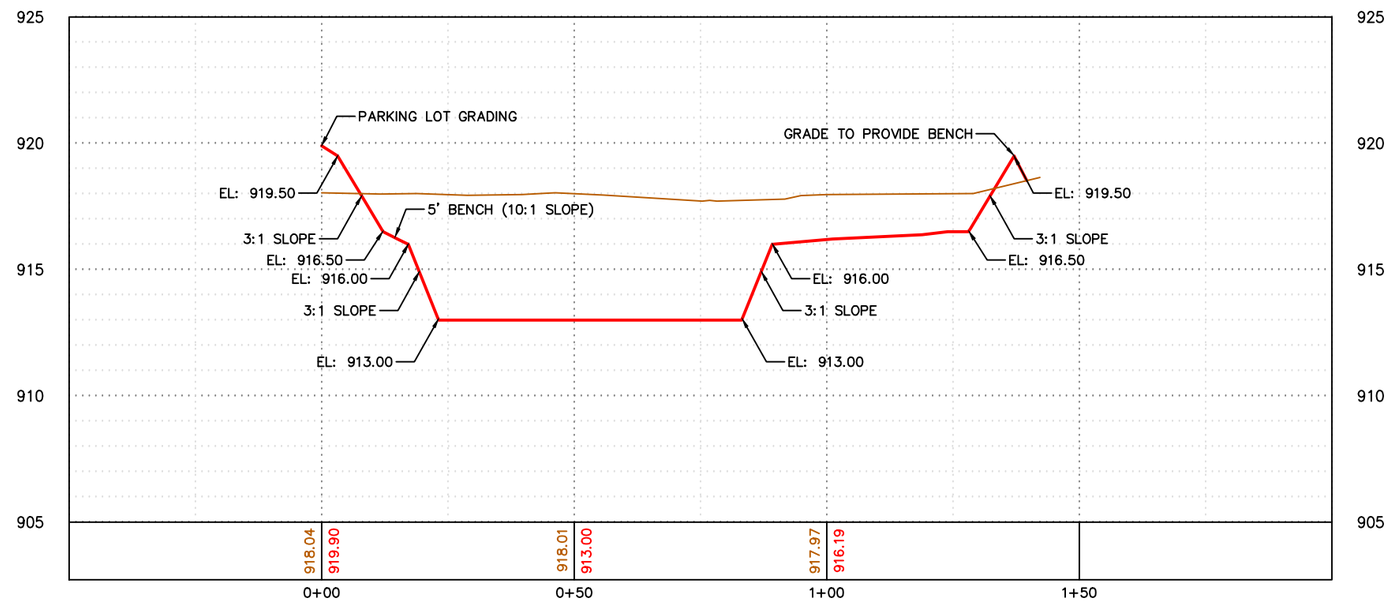

Turtle Ponds Detention Pond 2 PROFILE

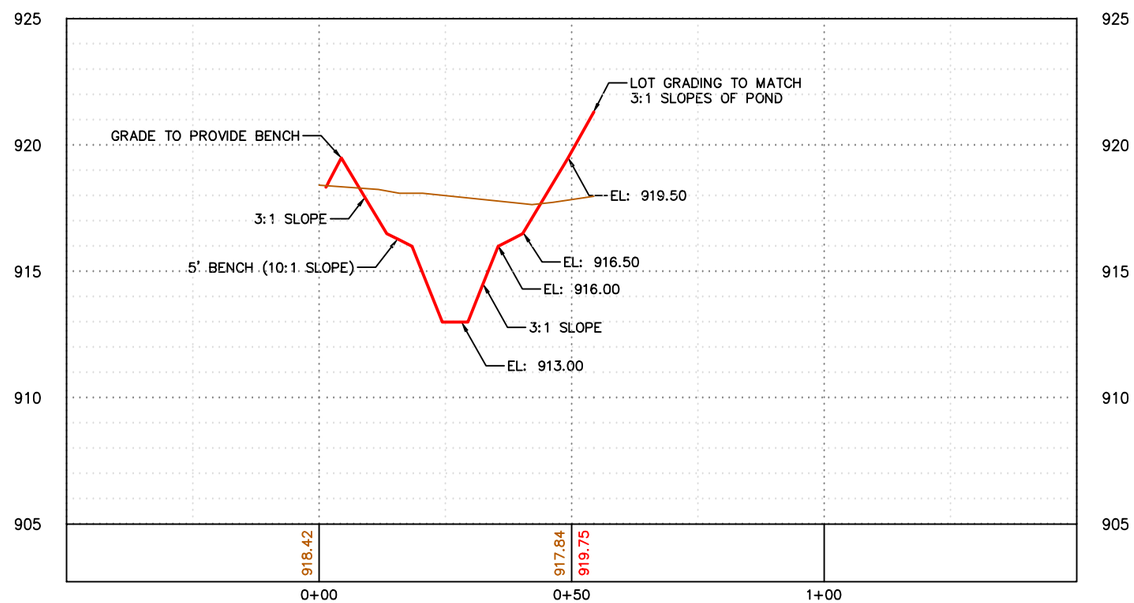

30 0 15 30

GRAPHIC SCALE IN FEET

I HEREBY CERTIFY THAT THIS PLAN, SPECIFICATION, OR REPORT WAS PREPARED BY ME OR UNDER MY DIRECT SUPERVISION AND THAT I AM A DULY LICENSED PROFESSIONAL ENGINEER UNDER THE LAWS OF THE STATE OF MINNESOTA.

NAME

DATE 5/18/2023 LIC. NO. 15051

REV	REVISION DESCRIPTION	DWN	APP	REV DATE
1	Comments from City	MPJ	DJJ	5/18/2023

JOHNSON ENGINEERING GROUP
PO Box 384
Windom, MN 56101
(507) 832-8450

DWN BY	CHK'D	APP'D
MPJ	MPJ	DJJ

DWG DATE 3/17/2023

SCALE 1"=30'

PROJECT Turtle Ponds 6th Addition

CLIENT BlueWaters Companies, Inc
17029 Vickers Street NE
Ham Lake, MN 55304

SHEET TITLE Storm Water Pond Profiles

PROJECT NO.	SHEET NO.	REV NO.
0093-01	C-109B	1

C:\Users\mpjoh\Johnson Engineering Dropbox\Johnson Engineering Group\Drafting\0093 BlueWaters Companies\01 Turtle Ponds 6th Addition\01 Turtle Ponds 6th Addition\C109B Storm Water Pond Profiles 2023-03-17 Turtle Ponds 6th Addition Family Stuff

STORM WATER POLLUTION PREVENTION PLAN (SWPPP)

TURTLE PONDS 6TH ADDITION

ANOKA COUNTY, MINNESOTA

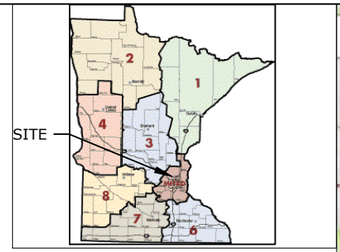

PROJECT LOCATION

STATE: MINNESOTA

MNDOT DISTRICT: METRO

COUNTY: ANOKA

CITY: ST. FRANCIS

SW 1/4 OF SW 1/4 SECTION: 33

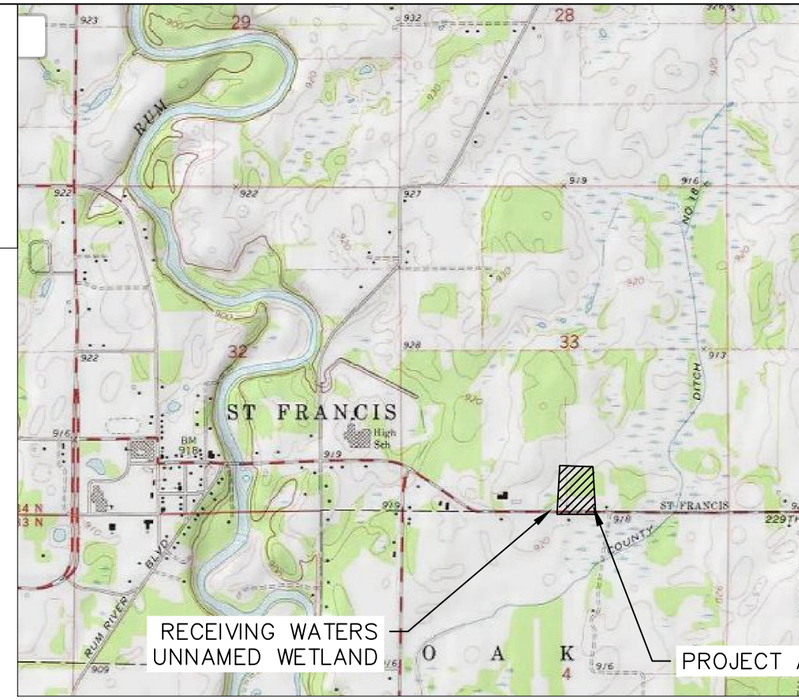

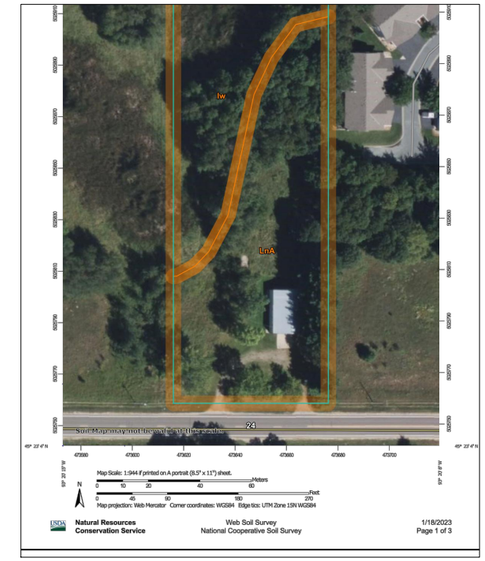

GENERAL PROJECT INFORMATION

RESPONSIBLE PARTIES:
The Contractor and Owner must apply for coverage under the MPCA General Storm Water Permit for Construction Activity as required by the National Pollutant Discharge Elimination System (NPDES) Phase II program. Coverage under the permit will begin automatically 7 calendar days after the post marked date on the application. [Longer time frames apply to sites that: (1) disturb areas greater than 50 acres AND discharge within 1 mile of a Special or Impaired Water; or (2) Use alternative storm water treatment techniques].

Owner:	BlueWaters Companies	Greg Chaffin Contact Person	(763) 777-0077 Phone
SWPPP Preparer:	Johnson Engineering Group, LLC	Dennis Johnson Contact Person	(507) 832-8450 Phone
Contractor:	---	--- Contact Person	--- Phone
Person Responsible for Inspections:	---	--- Contact Person	--- Phone

The individuals identified above have been trained in accordance with the Permit's training requirements.

At least one trained individual shall be present on the permitted project site or available to the project site within 72 hours.

Documentation of proper training shall be available within 72 hours upon request.

SPECIAL ENVIROMENTAL CONSIDERATIONS:
An enviromental review has not been completed for this project. Stormwater mitigative requirements have been incorporated into this SWPPP.

This site does not have the potential to affect threatened or endangered species.

This site does not drain to a Calcareous fen.

PROJECT DESCRIPTION:
This project includes disturbance of approximately 1.14 acres with 0.51 acres of new impervious area created from buildings, parking lots, and roads. Construction activities include the regrading of the area, placement of aggregate materials, grading, building construction, utility installation, and erosion and sediment control measures, seeding and mulching.

STORM WATER MANAGEMENT:
Type of storm water management used if more than 1 acre of new imperious surface is created:

- [X] Wet sedimentation basin
- [ ] Regional Pond
- [ ] Infiltration
- [ ] Permanent storm water management not required
- [ ] Filtration
- [ ] Alternative methods

Required Water Quality Volume:	2061 CF
Design Water Quality Volume:	2140 CF
Elevation of Water Quality Volume Storage:	912.20-915.20
Surface Area of Water Quality Volume Storage:	SEE PLAN & REPORT
Allowable Discharge of Water Quality Volume:	SEE PLAN & REPORT
Designed Discharge for Water Quality Volume:	SEE PLAN & REPORT
Required Infiltration Volume:	
Designed Infiltration Volume:	

BMP SUMMARY

COUNTY, STATE	TOWNSHIP	RANGE	SECTION(S)	LATITUDE	LONGITUDE
Anoka, MN	T-33-N	R-24-W	33	45°23'7.15"N	93°20'11.93"W

PROJECT AREAS

Total Project Size (Lot Size) =	2.71 ACRE
Total Project Size (Disturbed Area) =	1.14 ACRE
Existing area of impervious surface =	0.05 ACRE
Post construction area of impervious surface =	0.51 ACRE
Total new impervious surface area created =	0.46 ACRE
Planned construction start date:	SUMMER 2023
Estmated construction completion date:	FALL 2023

DESCRIPTION OF SITE AREAS

BlueWaters Companies is proposing the construction of seven single family houses. In addition to the single family houses two visitor parking lots are going to be constructed along with a proposed road to access the single family houses. Utilities including watermain, sanitary sewer, and storm sewer will also be installed as part of the development. This project is located within the municipality of St. Francis, MN. The sites storm water will be treated by a wet sedimentation basin.

Any construction sediment that has accumulated in the infiltration basin area during construction shall be removed prior to final seeding.

Follow the erosion and sediment control plan for all construction best management practices (BMP). Any changes to this SWPPP document shall be approved by the engineer and maintained on site with the original construction documents.

BMP SUMMARY

Surface waters which will receive storm water from the site within 1 mile of property boundary. include waters shown on USGS 7.5 minute quad and all waters identified in Appendix A of the permit.

For sites with a discharge point within 1 mile of, and flows to, an impaired water, additional BMP's have been included in this SWPPP.

For receiving waters with approved TMDLs, all specific implementation activities and BMP's regarding construction activities are included in this SWPPP.

SOIL TYPE SUMMARY

MAP UNIT SYMBOL	SOIL NAME	HYD. SOIL GROUP
Iw	ISANTI FINE SANDY LOAM	A/D
LnA	LINO LOAMY FINE SAND, 0 TO 4 PERCENT SLOPES	A/D

BMP SUMMARY

BMP	QUANTITY	UNIT
SILT FENCE, TYPE MACHINE SPLICED (1)	670	LIN FT
TEMPORARY DITCH CHECK, TYPE 3 (BIOROLL) (1)	N/A	LIN FT
SEED MIX 280 (1)	SEE LANDSCAPE PLAN	
HYDRAULIC MULCH MATRIX (1)	SEE LANDSCAPE PLAN	
ROCK ENTRANCE	1	EACH
INLET PROTECTION	16	EACH
DETENSION POND AND OUTLET	1	L.S.

NOTE:
(1) See sheet SW-103

NAME OF WATER BODY	TYPE (DITCH, POND, WETLAND, LAKE, ETC.)	APPENDIX A SPECIAL WATER?	FLOWS TO IMPAIRED WATER WITHIN 1 MILE?	USEPA APPROVED TMDL?
UNNAMED WETLAND	WETLAND			

I HEREBY CERTIFY THAT THIS PLAN, SPECIFICATION, OR REPORT WAS PREPARED BY ME OR UNDER MY DIRECT SUPERVISION AND THAT I AM A DULY LICENSED PROFESSIONAL ENGINEER UNDER THE LAWS OF THE STATE OF MINNESOTA.

NAME

DATE 5/18/2023 LIC. NO. 15051

REV	REVISION DESCRIPTION	DWN	APP	REV DATE
1	Comments from City	MPJ	DJJ	5/18/2023

JOHNSON ENGINEERING GROUP
PO Box 384
Windom, MN 56101
(507) 832-8450

DWN BY	CHK'D	APP'D
MPJ	MPJ	DJJ

DWG DATE 3/17/2023

SCALE N/A

PROJECT Turtle Ponds 6th Addition

CLIENT BlueWaters Companies, Inc
17029 Vickers Street NE
Ham Lake, MN 55304

SHEET TITLE SWPPP Cover

PROJECT NO.	SHEET NO.	REV NO.
0093-01	SW-101	1

C:\Users\mpjoh\Johnson Engineering Dropbox\Johnson Engineering Group\Drafting\0093 BlueWaters Companies\01 Turtle Ponds 6th Addition\CAD\SWPPP\0093-01 SWPPP.dwg 10:22 AM

CONSTRUCTION ACTIVITY NOTES:

EROSION PREVENTION PRACTICES:
Phased construction will be used to extent practical or as indicated in the plans to minimize exposed soils.

Areas not to be disturbed shall be delineated with flags, stakes, signs, silt fence, etc. prior to work beginning. The normal wetted perimeter of all ditches or swales, including storm water management pond slopes, that drain waters from the site must be stabilized within 200' of any property edge or discharge point, including storm sewer inlets, within 24 hours or connection.

Energy dissipation or other outlet treatment must be installed within 24 hours of connection.

All exposed soils must be stabilized as soon as possible but in no case later than 14 days after the construction activity has temporarily or permanently ceased.

Seed and/or sod, fertilizer, and mulch shall be placed as indicated in the plans and project specifications.

Rapid stabilization shall be of type and quantity indicated in the project specifications. Additional rapid stabilization may be necessary to minimize erosion throughout the duration of the project. Type and quantity shall be determined by the engineer or inspector prior to installation. In extreme cases, the contractor shall use any available rapid stabilization to immediately mitigate erosion, then further remedy the situation with approval by owner or engineer.

If the Contractor stockpiles material on site, he shall install the appropriated erosion control devices around the stockpile and perform the best management practices possible to avoid erosion from the stockpile.

Temporary (or permanent) sedimentation ponds are required for areas > 10 acres of disturbed soils draining to one point.

SEDIMENT CONTROL PRACTICES:
Installation of silt fence and all other down gradient sediment protection measures shall be completed prior to commencement of upstream land disturbing activities.

Silt fence shall be installed along constant contours with continuous lengths not to exceed 600 feet. As indicated on plans, silt fence will be periodically broken and hooked upslope in "J-hook" or "smile" patterns to provide ponding and slow runoff.

No unbroken slope lengths greater than 75 feet are permitted when slope is 3:1 or greater. Slope shall be broken with silt fence or biorolls as indicated on plans.

The timing and installation of sediment control practices may be adjusted to accommodate short term activities, but sediment control practices must be installed before the next precipitation event even if the activity is not complete.

Install ditch checks (Biorolls) as shown in plan. Ditch checks to be installed after roadway is removed and left in place until final restoration is established.

Vehicle tracking to be minimized to all practical extents. All eroded material that leaves the construction zone shall be collected by the contractor and returned to the site of the contractor's expense.

All stock piles shall be surrounded by silt fence and seeded with temporary seed and mulch. Locations of stockpiles and the associated BMPs shall be shown on the site plans.

All site storm sewer inlets, as well as off site downstream inlets with potential to receive sediment, shall be protected with approved established inlet protection may be removed in winter, if the project has an approval letter from jurisdictional authority or can produce it within 72 hours.

Sediment shall be removed from surface waters immediately upon discovery and in no case later than 7 days after discovery.

Infiltration areas shall be inspected routinely to ensure that no sediment from ongoing construction activities has reached the infiltration area and these areas shall remain protected from compaction due to construction equipment.

TEMPORARY SEDIMENTATION BASINS & DEWATERING:
Temporary sedimentation basins are required prior to runoff leaving the construction site or entering surface waters when 10 or more acres or disturbed soils drain to a common location. The basin must provide 3,600 cubic feet of storage below the outlet per acre drained. If hydraulic calculations are available, the temporary sedimentation basin must provide a storage volume equivalent to the 2-year, 24-hour storm, but in no case less than 1800 cubic feet per acre drained. The temporary sedimentation basin must be constructed and made operational concurrent with the start of soil disturbance up gradient of the pond. The temporary sedimentation basin shall be designed to prevent short circuiting. The outfall shall be designed to remove floatable debris, allow for complete drawdown of the pond, and have energy dissipation. The emergency spillway shall be stabilized.

All dewatering on site during construction must be routed to temporary sedimentation basins.

Temporary sedimentation basins must be drained within 48 hours of any rainfall event. If the rock filtered outlets plug or cause the pond not to drain within 48 hours, ponds are to be drained with pumps. Pump inlets should be protected with a silt fence ring and rock filter berm as shown in the details, or an approved alternative. Excessive sediment-laden water that is not properly filtered will not be permitted to discharge from site.

Dewatering practices cannot cause downstream nuisance conditions, erosion, or non-permitted wetland inundation.

When sediment level has reached ½ the storage volume in the temporary sedimentation basin, the basin shall be drained and sediment removed within 7 days.

POLLUTION PREVENTION:
All solid waste collected from the construction site must be disposed of in accordance with IADNR disposal requirements.

All hazardous material (e.g., oil, gasoline, fuel, antifreeze, paint, cleaning solvents, curing compounds, fertilizers, etc.) must be properly stored (including secondary containment when necessary) to prevent spills, hazardous waste must be in compliance with IADNR leaks, or other discharge.

External washing areas must be limited to a defined area of the site. All runoff containing hazardous material must be properly collected and disposed of. Defined area must be contained with heavy- or super-duty silt fence. NO ENGINE DEGREASING ALLOWED ON SITE.

The contractor is responsible for monitoring air pollution and ensuring it does not exceed levels set by local, state, or federal regulations. This includes dust created by work being performed on the site. Air pollution and dust control correction is considered incidental to the unit bid prices for which work is being performed. Additional dust control measures may be required by the Engineer.

INSPECTION & MAINTENANCE:
The permittees must routinely inspect the construction site once every seven (7) days during active construction and within 24 hours of a rainfall event greater than 0.5 inches in a 24 hour period.

All inspection performed during construction must be recorded and records retained on site with the SWPPP in accordance with the storm water permit. Records must include a site map showing areas of land disturbing activities and areas where activities have temporarily or permanently ceased.

Silt fence, biorolls and inlet protection devices must be maintained when non-functional or when accumulated sediment reaches 1/3 of device height.

Off site vehicle tracking to be removed within 24 hours of occurrence.

All non-functional BMPs must be repaired, replaced, or supplemented with functional BMPS within 24 hours of discovery, or as soon as field conditions allow access.

Maintenance and inspection record forms are located in the project specifications for reference or provided by the site inspector.

FINAL STABILIZATION
The permittees must submit a Notice of Termination (N.O.T.) within 30 days of final stabilization or transferring permit responsibility to another owner or operator.

The Contractor must ensure final stabilization of the site. Final stabilization shall include a minimum of 70% vegetation establishment (100% stabilized) on all previous areas.

All temporary erosion control measures and BMPs must be removed as part of the final site stabilization, unless directed otherwise by owner or engineer.

IMPLEMENTATION SCHEDULE & PHASING:
1) Install silt fence, biorolls, and rock entrances.
2) Excavate for detention pond.
3) Construct building pads, roads, and parking.
4) Stock pile excavated material as needed.
5) Fill low areas with fill material.
6) Stabilize fill, and begin construction of buildings.
7) Add additional temporary BMPs as necessary during construction based on inspection reports.
8) Ensure final stabilization measures are complete.
9) Remove erosion and sediment control BMPs.
10) Submit Notice of Termination (NOT) to MPCA within 30 days of final stabilization.

RECORD RETENTION:
The SWPPP, all changes to it, and inspections and maintenance records must be kept at the site during construction. All owner(s) must retain the following for 3 years after submittal of NOT:
1) SWPPP;
2) Any other permits required for the project;
3) Inspection and maintenance logs;
4) All permanent operation and maintenance agreements for surface water facilities;
5) All design calculations for temporary and permanent storm water management.

PLAN SHEETS:
Plan sheets SWPPP-101 to SWPPP-105 are also considered a part of the SWPPP for this project.

I HEREBY CERTIFY THAT THIS PLAN, SPECIFICATION, OR REPORT WAS PREPARED BY ME OR UNDER MY DIRECT SUPERVISION AND THAT I AM A DULY LICENSED PROFESSIONAL ENGINEER UNDER THE LAWS OF THE STATE OF MINNESOTA.

NAME

DATE 5/18/2023 LIC. NO. 15051

REV	REVISION DESCRIPTION	DWN	APP	REV DATE
1	Comments from City	MPJ	DJJ	5/18/2023

JOHNSON ENGINEERING GROUP
PO Box 384
Windom, MN 56101
(507) 832-8450

DWN BY	CHK'D	APP'D
MPJ	MPJ	DJJ

DWG DATE 3/17/2023
SCALE N/A

PROJECT Turtle Ponds 6th Addition
CLIENT BlueWaters Companies, Inc
17029 Vickers Street NE
Ham Lake, MN 55304

SHEET TITLE SWPPP Notes
PROJECT NO. 0093-01
SHEET NO. SW-102
REV NO. 1

C:\Users\mpjoh\Johnson Engineering Dropbox\Johnson Engineering Group\Drafting\0093 BlueWaters Companies\01 Turtle Ponds 6th Addition\CAD\SWPPP.dwg 10:23 AM

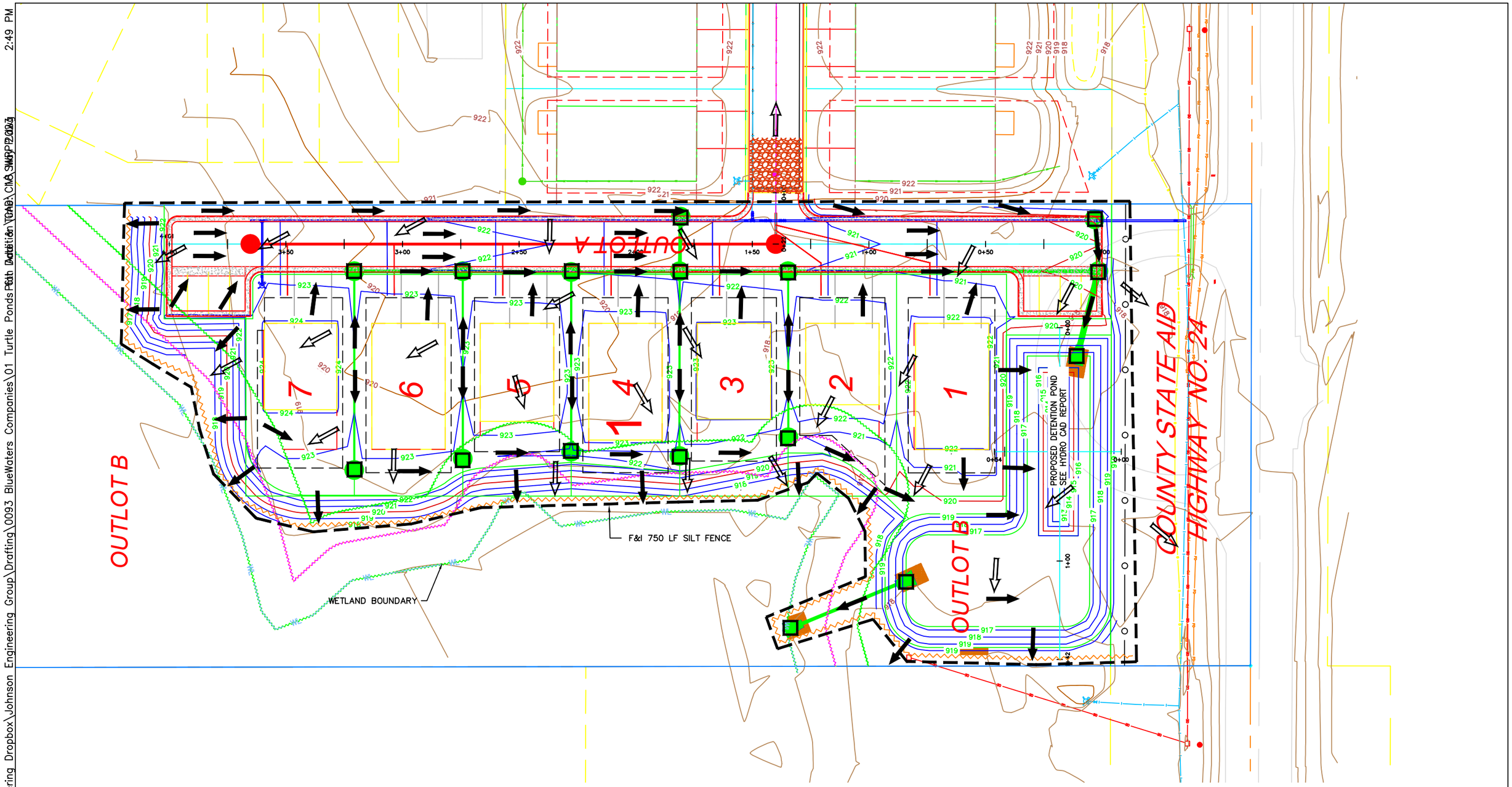

LEGEND

- = SILT FENCE
- = TEMPORARY ROCK CONSTRUCTION ENTRANCE
- = LIMITS OF DISTURBANCE
- = TEMPORARY DITCH CHECK
- = CULVERT/ INLET PROTECTION
- = EXISTING FLOW ARROW
- = PROPOSED FLOW ARROW

GENERAL NOTES:

1.) ALL INLETS AND FLARED END SECTIONS, BOTH EXISTING AND PROPOSED (ONSITE AND OFFSITE) WITHIN 200' OF THE CONSTRUCTION DISTURBANCE SHALL HAVE CULVERT PROTECTION IN PLACE PRIOR TO DISTURBANCE AND AFTER CONSTRUCTION.
2.) CONSTRUCT ROCK CONSTRUCTION ENTRANCES AS NECESSARY THROUGHOUT THE PROJECT.
3.) THE CONTRACTOR IS RESPONSIBLE FOR REMOVAL OF THE ROCK CONSTRUCTION ENTRANCES AT END OF THE PROJECT.
4.) SEED ALL DISURBED AREAS WITH SEED MIXTURE 280 AND TYPE 3 MULCH UNLESS INDICATED OTHERWISE ON THE PLAN.
5.) ALL SEED NOT HYDRO APPLIED SHALL BE DISK ANCHORED.

N

40 0 20 40

GRAPHIC SCALE IN FEET

I HEREBY CERTIFY THAT THIS PLAN, SPECIFICATION, OR REPORT WAS PREPARED BY ME OR UNDER MY DIRECT SUPERVISION AND THAT I AM A DULY LICENSED PROFESSIONAL ENGINEER UNDER THE LAWS OF THE STATE OF MINNESOTA.

NAME

DATE 5/18/2023 LIC. NO. 15051

REV	REVISION DESCRIPTION	DWN	APP	REV DATE
1	Comments from City	MPJ	DJJ	5/18/2023

JOHNSON ENGINEERING GROUP
PO Box 384
Windom, MN 56101
(507) 832-8450

DWN BY	CHK'D	APP'D
MPJ	MPJ	DJJ

DWG DATE 3/17/2023

SCALE 1"=40'

PROJECT Turtle Ponds 6th Addition

CLIENT BlueWaters Companies, Inc
17029 Vickers Street NE
Ham Lake, MN 55304

SHEET TITLE SWPPP Site Plan

PROJECT NO.	SHEET NO.	REV NO.
0093-01	SW-103	1

C:\Users\mpjoh\Johnson Engineering Dropbox\Johnson Engineering Group\Drafting\0093 BlueWaters Companies\01 Turtle Ponds 6th Addition\CAD\SWPPP.dwg 2:49 PM

C:\Users\mpjoh\Johnson Engineering Dropbox\Johnson Engineering Group\Drafting\0093 BlueWaters Companies\01 Turtle Ponds 6th Addition\TCAB\CMA SWPPP 2023.dwg 10:23 AM

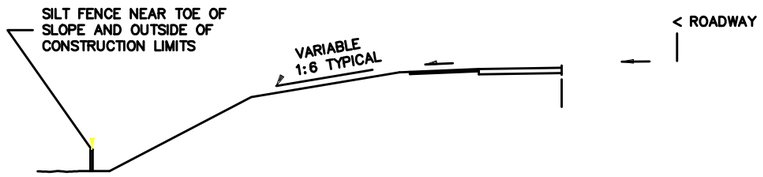

LOCATION OF SILT FENCE
AT TOE OF ROADWAY EMBANKMENT

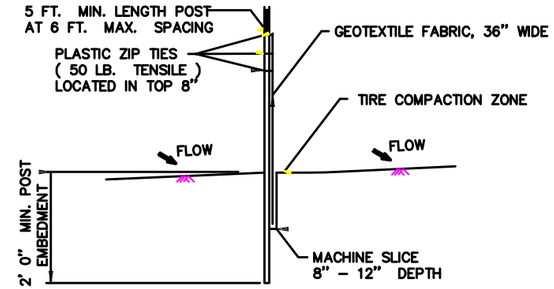

SILT FENCE, MACHINE SLICED
DESIGN GUIDELINES:
TO PROTECT AREAS FROM SHEET FLOW.
MAXIMUM CONTRIBUTING AREA: 1 ACRE.

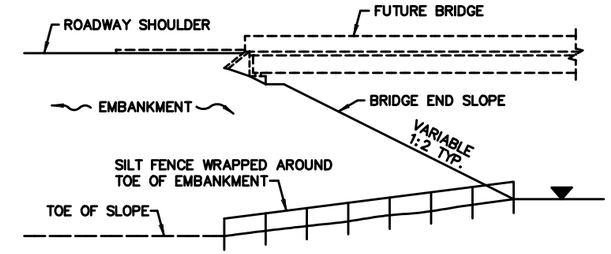

BRIDGE FILL

DESIGN GUIDELINES:
WATER COURSE FLOW VELOCITY: STAGNANT
CONTRIBUTING SLOPE AREA: 1/2 ACRE

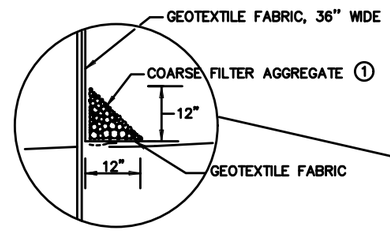

OPTIONAL METHOD
FOR SILT FENCE, HEAVY DUTY

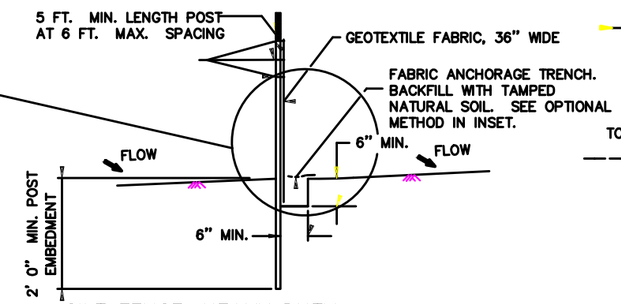

SILT FENCE, HEAVY DUTY
(HAND INSTALLED)
DESIGN GUIDELINES:
TO PROTECT AREAS FROM SHEET FLOW.
MAXIMUM CONTRIBUTING AREA: 1 ACRE.

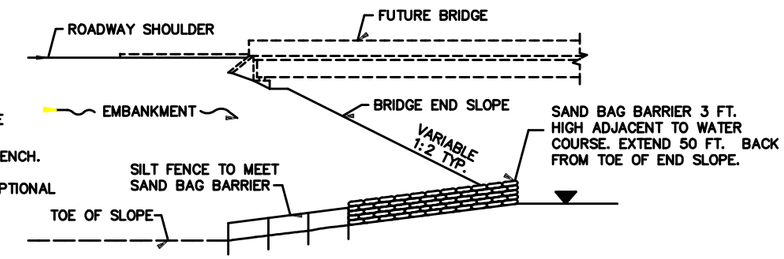

BRIDGE FILL

DESIGN GUIDELINES:
WATER COURSE FLOW VELOCITY: 1 TO 7 FT./SEC.
CONTRIBUTING SLOPE AREA: 1 ACRE

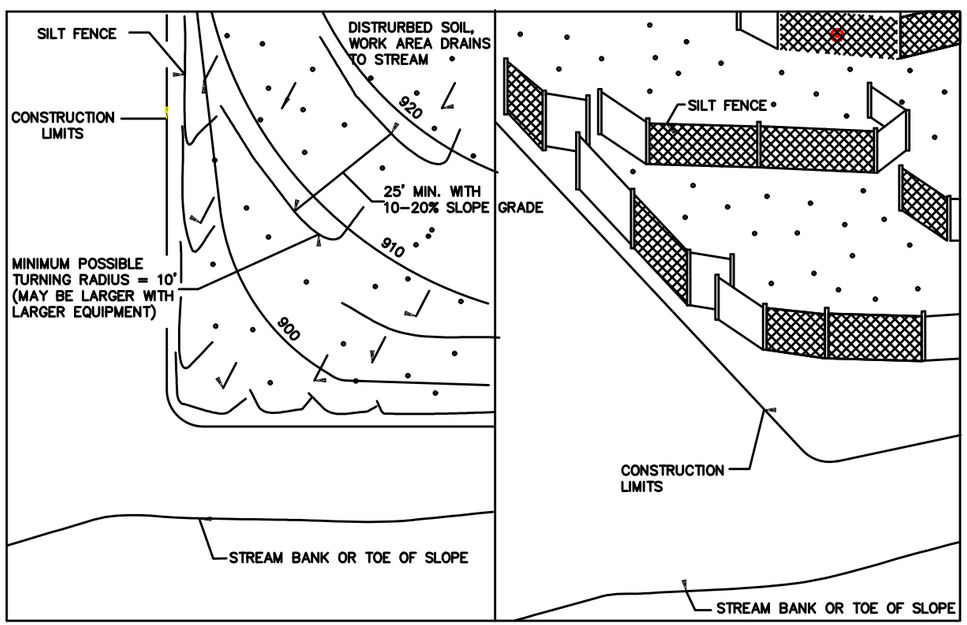

PLAN VIEW

SIDE VIEW

SILT FENCE, J–HOOK INSTALLATION

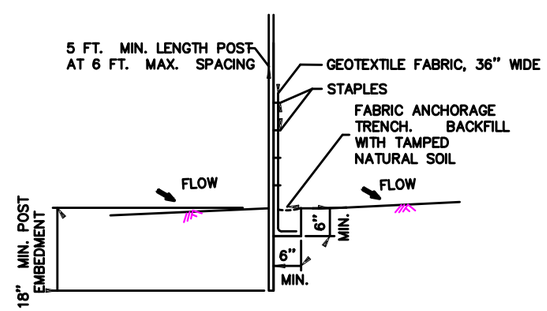

SILT FENCE, PREASSEMBLED
DESIGN GUIDELINES:
TO PROTECT AREAS FROM SHEET FLOW.
MAXIMUM CONTRIBUTING AREA: 1 ACRE.

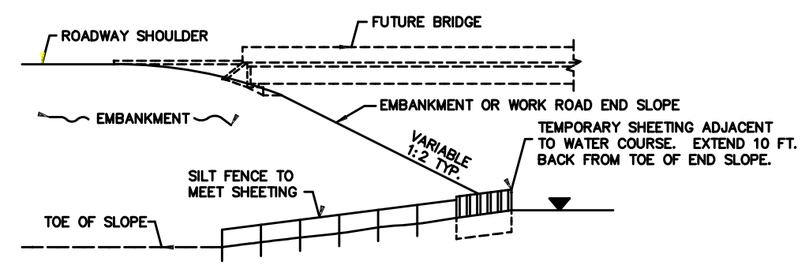

EMBANKMENT OR WORK ROAD FILL

DESIGN GUIDELINES:
WATER COURSE FLOW VELOCITY: 8 TO 15 FT./SEC.
CONTRIBUTING SLOPE AREA: 3 ACRES

SILT FENCE AT BRIDGE EMBANKMENT ADJACENT TO WATER

TEMPORARY SEDIMENT CONTROL
SILT FENCE

NOTES:
SEE SPECS. 2573, 3149 & 3886.
① COARSE FILTER AGGREGATE (SPEC. 3149) SHALL BE INCIDENTAL.

I HEREBY CERTIFY THAT THIS PLAN, SPECIFICATION, OR REPORT WAS PREPARED BY ME OR UNDER MY DIRECT SUPERVISION AND THAT I AM A DULY LICENSED PROFESSIONAL ENGINEER UNDER THE LAWS OF THE STATE OF MINNESOTA.

NAME

DATE 5/18/2023 LIC. NO. 15051

REV	REVISION DESCRIPTION	DWN	APP	REV DATE
1	Comments from City	MPJ	DJJ	5/18/2023

JOHNSON ENGINEERING GROUP
PO Box 384
Windom, MN 56101
(507) 832-8450

DWN BY	CHK'D	APP'D
MPJ	MPJ	DJJ

DWG DATE 3/17/2023
SCALE N/A

PROJECT: Turtle Ponds 6th Addition
CLIENT: BlueWaters Companies, Inc
17029 Vickers Street NE
Ham Lake, MN 55304

SHEET TITLE: SWPPP Details
PROJECT NO. 0093–01
SHEET NO. SW–104
REV NO. 1

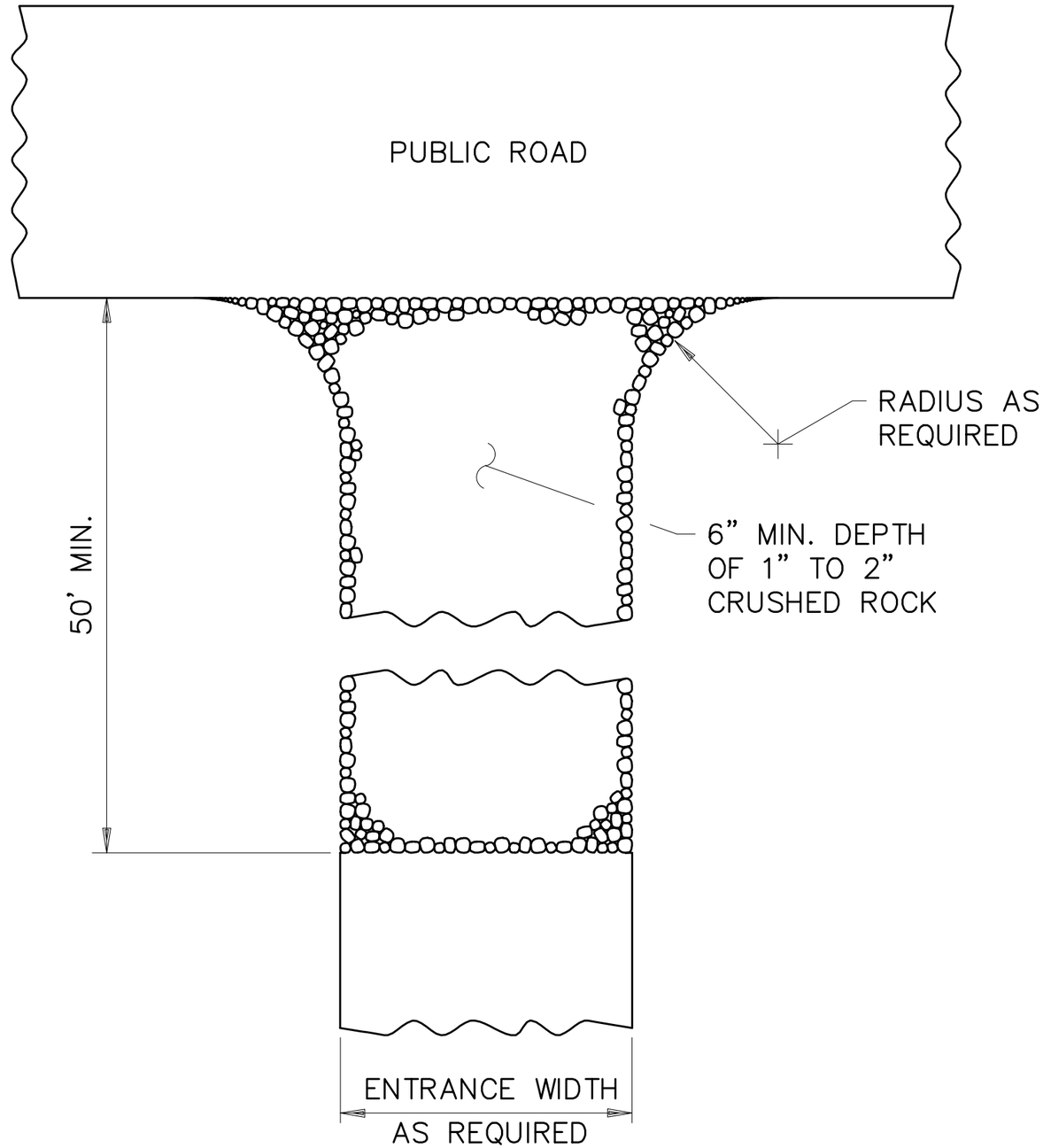

ROCK CONSTRUCTION ENTRANCE (1)

I HEREBY CERTIFY THAT THIS PLAN, SPECIFICATION, OR REPORT WAS PREPARED BY ME OR UNDER MY DIRECT SUPERVISION AND THAT I AM A DULY LICENSED PROFESSIONAL ENGINEER UNDER THE LAWS OF THE STATE OF MINNESOTA.

NAME

DATE 5/18/2023 LIC. NO. 15051

REV	REVISION DESCRIPTION	DWN	APP	REV DATE
1	Comments from City	MPJ	DJJ	5/18/2023

JOHNSON ENGINEERING GROUP
PO Box 384
Windom, MN 56101
(507) 832-8450

DWN BY	CHK'D	APP'D
MPJ	MPJ	DJJ

DWG DATE 3/17/2023

SCALE N/A

PROJECT Turtle Ponds 6th Addition

CLIENT BlueWaters Companies, Inc
17029 Vickers Street NE
Ham Lake, MN 55304

SHEET TITLE SWPPP Details

PROJECT NO.	SHEET NO.	REV NO.
0093-01	SW-105	1

C:\Users\mpjoh\Johnson Engineering Dropbox\Johnson Engineering Group\Drafting\0093 BlueWaters Companies\01 Turtle Ponds 6th Addition\TCAD\CMA SWPPP.dwg 10:23 AM

TREES FOR REMOVAL

TREE NUMBER	DBH (IN.)	COMMON NAME	BOTANIC NAME	NOTES
103	18	Green Ash	Fraxinus pennsylvanica	
104	22	Green Ash	Fraxinus pennsylvanica	
105	57	Silver Maple	Acer saccharinum	
106	31	Crabapple	Malus	
107	23	Crabapple	Malus	
108	18	Crabapple	Malus	
109	17	Crabapple	Malus	
114	20	White Pine	Pinus strobus	
115	14	Red Pine	Pinus resinosa	
116	16	Red Pine	Pinus resinosa	
117	14	Red Pine	Pinus resinosa	
118	16	Red Pine	Pinus resinosa	
119	10	Red Pine	Pinus resinosa	
120	16	White Pine	Pinus strobus	
121	20	White Pine	Pinus strobus	
122	6	White Pine	Pinus strobus	
123	14	Red Pine	Pinus resinosa	
124	12	White Pine	Pinus strobus	
125	15	Red Pine	Pinus resinosa	
126	12	Red Pine	Pinus resinosa	
127	23	White Pine	Pinus strobus	
128	19	White Pine	Pinus strobus	
129	21	White Pine	Pinus strobus	
130	8	Red Pine	Pinus resinosa	
131	15	Red Pine	Pinus resinosa	
132	14	White Pine	Pinus strobus	
133	10	Red Pine	Pinus resinosa	
135	14	White Pine	Pinus strobus	
136	9	Red Pine	Pinus resinosa	
137	3	Red Pine	Pinus resinosa	
138	8	White Pine	Pinus strobus	
139	11	White Pine	Pinus strobus	
140	24	White Pine	Pinus strobus	
141	31	White Pine	Pinus strobus	
143	26	Northern Pin Oak	Quercus ellipsoidalis	
144	11	Northern Pin Oak	Quercus ellipsoidalis	
145	16	Box Elder	Acer negundo	
146	8	Black Cherry	Prunus serotina	
148	9	Swamp White Oak	Quercus bicolor	
149	9	Black Tupelo	Nyssa sylvatica	
151	12	Northern Pin Oak	Quercus ellipsoidalis	
152	8	Black Cherry	Prunus serotina	
153	21	American Elm	Ulmus americana	
154	9	Black Cherry	Prunus serotina	
156	13	Birch	Betula	
157	22	Red Maple	Acer rubrum	Multistem: 2
158	14	Black Cherry	Prunus serotina	
159	9	Black Cherry	Prunus serotina	
160	11	Swamp White Oak	Quercus bicolor	
161	12	Black Cherry	Prunus serotina	
162	8	Black Cherry	Prunus serotina	
163	9	Black Cherry	Prunus serotina	
164	22	Black Cherry	Prunus serotina	
165	17	Northern Pin Oak	Quercus ellipsoidalis	
166	8	Black Cherry	Prunus serotina	
167	27	Black Cherry	Prunus serotina	
168	22	Northern Pin Oak	Quercus ellipsoidalis	
169	8	Northern Pin Oak	Quercus ellipsoidalis	
170	9	Northern Pin Oak	Quercus ellipsoidalis	
171	8	Black Cherry	Prunus serotina	
172	13	Sugar Maple	Acer saccharum	
175	8	Northern Pin Oak	Quercus ellipsoidalis	
176	12	Swamp White Oak	Quercus bicolor	
179	28	Red Maple	Acer rubrum	
180	8	Birch	Betula	
187	8	Birch	Betula	
188	9	Birch	Betula	
189	8	Birch	Betula	
190	10	Sugar Maple	Acer saccharum	

TREE NUMBER	DBH (IN.)	COMMON NAME	BOTANIC NAME	NOTES
191	10	Birch	Betula	
192	10	Birch	Betula	
193	8	Birch	Betula	
194	8	Sugar Maple	Acer saccharum	
195	10	Birch	Betula	
196	10	Birch	Betula	
197	10	Birch	Betula	
199	9	Birch	Betula	
200	9	Birch	Betula	
208	11	Birch	Betula	
209	8	Birch	Betula	
210	9	Birch	Betula	
211	8	Birch	Betula	
212	10	Birch	Betula	
218	8	Birch	Betula	
221	8	Birch	Betula	
222	29	White Mulberry	Morus alba	Multistem: 3
223	9	Birch	Betula	
224	8	Birch	Betula	
225	9	Birch	Betula	
226	14	Birch	Betula	Multistem: 2

TOTAL TREES: 90 **TOTAL DBH: 1,248"**

TREES FOR PRESERVATION

TREE NUMBER	DBH (IN.)	COMMON NAME	BOTANIC NAME	NOTES
101	12	Aspen	Populus tremuloides	
110	24	Crabapple	Malus	
111	11	Crabapple	Malus	
112	16	Silver Maple	Acer saccharinum	
113	40	White Pine	Pinus strobus	
142	24	Northern Pin Oak	Quercus ellipsoidalis	
155	11	Black Cherry	Prunus serotina	Multistem: 2
174	9	Northern Pin Oak	Quercus ellipsoidalis	
177	8	Birch	Betula	
178	10	Birch	Betula	
182	8	Birch	Betula	
183	10	Birch	Betula	
184	19	Birch	Betula	
185	9	Birch	Betula	
186	8	Birch	Betula	
198	12	Birch	Betula	
201	12	Birch	Betula	
202	11	Birch	Betula	Multistem: 2
203	8	Birch	Betula	
204	8	Birch	Betula	
205	8	Birch	Betula	
206	9	Red Maple	Acer rubrum	
207	10	Red Maple	Acer rubrum	
213	26	Northern Pin Oak	Quercus ellipsoidalis	
214	9	Birch	Betula	
215	10	Birch	Betula	
216	9	Birch	Betula	
217	8	Birch	Betula	Multistem: 3
219	8	Birch	Betula	
220	16	Birch	Betula	

TOTAL TREES: 30 **TOTAL DBH: 383"**

MIDWEST WETLAND improvements

P.O. BOX 448
VICTORIA, MN 55386
PHONE: (952) 261-9990
WWW.MIDWESTWETLANDS.COM

CERTIFICATION:

I HEREBY CERTIFY THAT THIS PLAN, SPECIFICATION, OR REPORT WAS PREPARED BY ME OR UNDER MY DIRECT SUPERVISION AND THAT I AM A DULY LICENSED LANDSCAPE ARCHITECT UNDER THE LAWS OF THE STATE OF MINNESOTA.

LUCIUS JONETT

LICENSE NO.: 52856

DATE: 05/17/2023

SUB CONSULTANT:

ISSUE NO.:	DESCRIPTION:	DATE:
0	PRELIMINARY SUBMITTAL	01/18/2023
1	SINGLE FAMILY LAYOUT REVISION	03/16/2023
2	REVISIONS PER CITY COMMENT	04/27/2023
3	REVISIONS PER CITY COMMENT	05/17/2023

PROJECT TITLE:

TURTLE PONDS 6TH ADDITION

ST. FRANCIS, MN

CLIENT:

JOHNSON ENGINEERING GROUP
PO BOX 384
WINDOM, MN 56101
PHONE: 507-822-1735
WWW.JOHNSONENGRP.COM

PROJECT NO.: 0021-01

DWN BY:	CHK'D BY:	APP'D BY:
PAG	LNJ	LNJ

ISSUE DATE: 05-17-2023

ISSUE NO.: 3

SHEET TITLE: TREE SURVEY

SHEET NO.: L-100

5/18/2023 8:39:01 AM

C:\Users\PaytonCoerg\Midwest Wetland Improvements, LLC\Midwest Wetlands - OneDrive - MWI\Projects\0021 JEG\0001 - Turtle Ponds 6th Addition\5_DESIGN\1_CAD\3 PLANSHEETS\B\0021-01 L-100 Landscape Notes 05-17.dwg

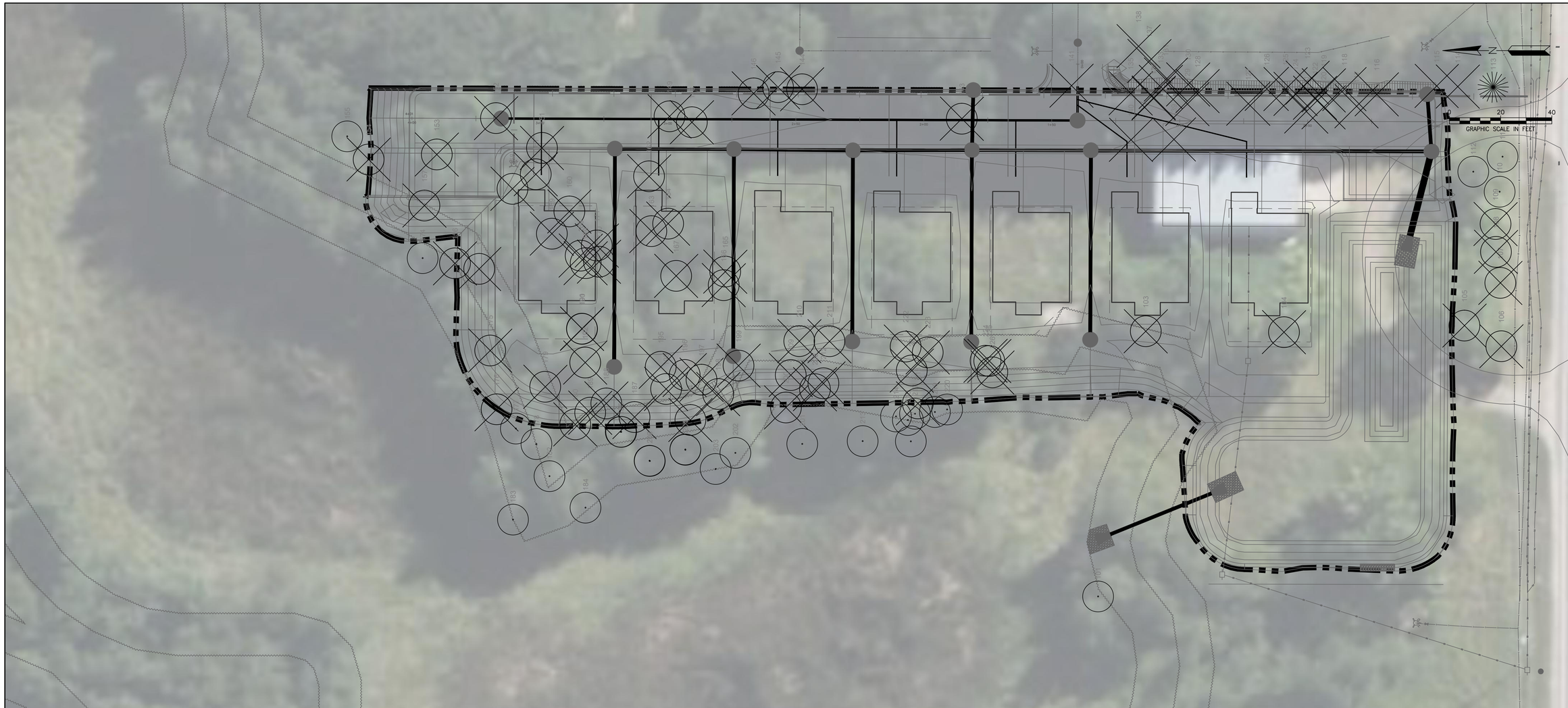

GRADING LIMITS

PRESERVATION LEGEND

EXISTING DECIDUOUS TREE TO REMAIN

EXISTING CONIFEROUS TREE TO REMAIN

REMOVAL LEGEND

EXISTING DECIDUOUS TREE TO BE REMOVED

EXISTING CONIFEROUS TREE TO BE REMOVED

GENERAL NOTE

HOUSES AND DRIVEWAYS SHOWN ARE FOR SCHEMATIC PURPOSES AND MAY ADJUST BASED ON FINAL HOUSE OPTION CHOSEN FOR THE LOT

WARNING:

THE CONTRACTOR SHALL BE RESPONSIBLE FOR CALLING FOR LOCATIONS OF ALL EXISTING UTILITIES. THEY SHALL COOPERATE WITH ALL UTILITY COMPANIES IN MAINTAINING THEIR SERVICE AND/OR RELOCATION OF LINES.

THE CONTRACTOR SHALL CONTACT GOPHER STATE ONE CALL AT 651-454-0002 AT LEAST 48 HOURS IN ADVANCE FOR THE LOCATIONS OF ALL UNDERGROUND WIRES, CABLES, CONDUITS, PIPES, MANHOLES, VALVES OR OTHER BURIED STRUCTURES BEFORE DIGGING. THE CONTRACTOR SHALL REPAIR OR REPLACE THE ABOVE WHEN DAMAGED DURING CONSTRUCTION AT NO COST TO THE OWNER.

GOPHER STATE ONE CALL

TWIN CITY AREA: 651-454-0002
TOLL FREE 1-800-252-1166

MIDWEST WETLAND improvements
P.O. BOX 448
VICTORIA, MN 55386
PHONE: (952) 261-9990
WWW.MIDWESTWETLANDS.COM

CERTIFICATION:

I HEREBY CERTIFY THAT THIS PLAN, SPECIFICATION, OR REPORT WAS PREPARED BY ME OR UNDER MY DIRECT SUPERVISION AND THAT I AM A DULY LICENSED LANDSCAPE ARCHITECT UNDER THE LAWS OF THE STATE OF MINNESOTA.

LUCIUS JONETT

LICENSE NO.: 52856

DATE: 05/17/2023

SUB CONSULTANT:

ISSUE NO.:	DESCRIPTION:	DATE:
0	PRELIMINARY SUBMITTAL	01/18/2023
1	SINGLE FAMILY LAYOUT REVISION	03/16/2023
2	REVISIONS PER CITY COMMENT	04/27/2023
3	REVISIONS PER CITY COMMENT	05/17/2023

PROJECT TITLE:

TURTLE PONDS 6TH ADDITION

ST. FRANCIS, MN

CLIENT:

JOHNSON ENGINEERING GROUP
PO BOX 384
WINDOM, MN 56101
PHONE: 507-822-1735
WWW.JOHNSONENGRP.COM

PROJECT NO.:	0021-01	
DWN BY: PAG	CHK'D BY: LNJ	APP'D BY: LNJ
ISSUE DATE:	05-17-2023	
ISSUE NO.:	3	

SHEET TITLE:

TREE PRESERVATION PLAN

SHEET NO.:

L-101

5/18/2023 8:39:49 AM
C:\Users\PaytonGoing\Midwest Wetland Improvements, LLC\Midwest Wetlands - OneDrive - MWI\Projects\0021 JEG\0001 - Turtle Ponds 6th Addition\5_DESIGN\1_CAD\3 PLANSHEETS\0021-01 L-101 Tree Preservation Plan 05-17.dwg

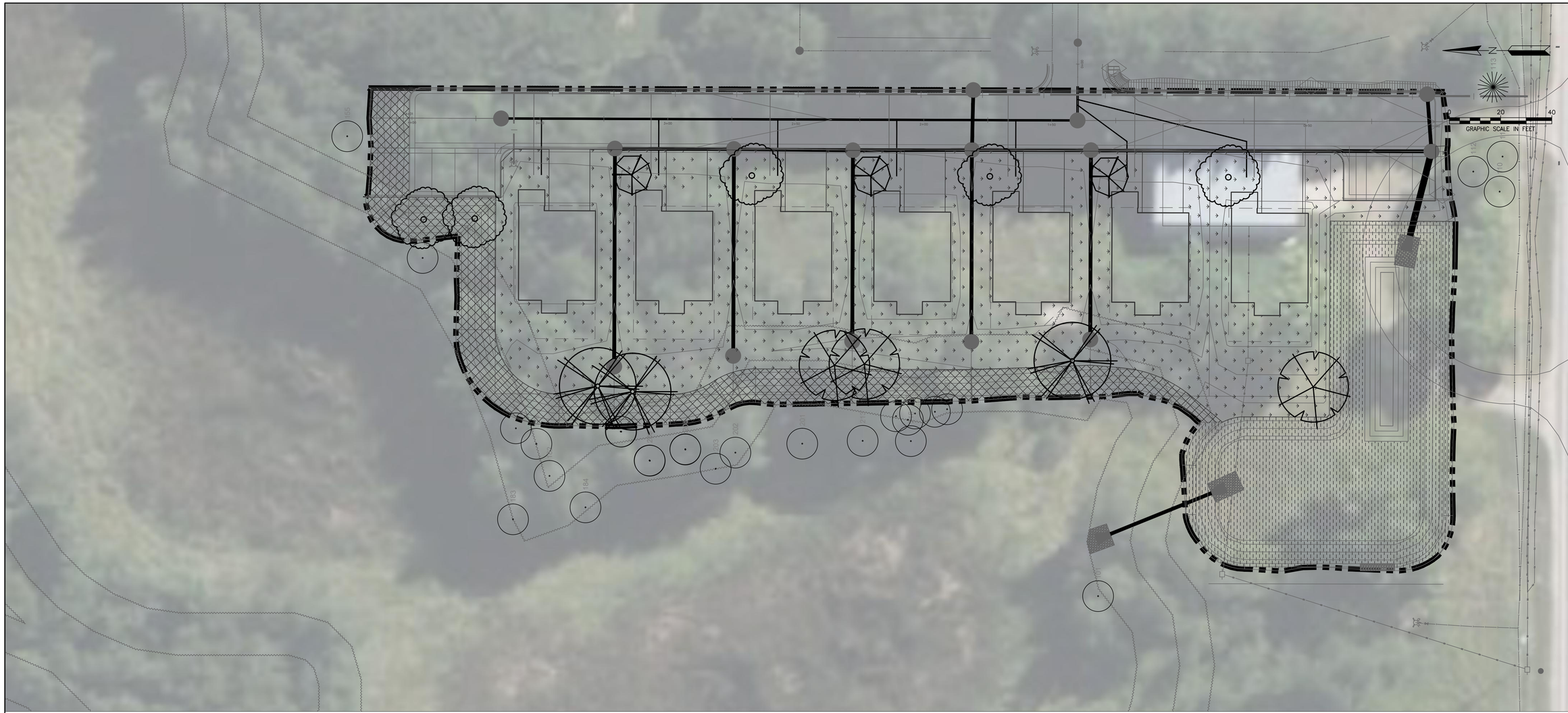

PLANT SCHEDULE

SYMBOL	QTY.	COMMON NAME	SCIENTIFIC NAME	SIZE	SPACING O.C.	MATURE DIMENSIONS
DECIDUOUS TREES		11				
REO	5	Ironwood	Ostrya virginiana	2" BB	AS SHOWN	H 25-40' W 20'-30'
RVB	3	River Birch	Betula nigra	2" BB	AS SHOWN	H 40-60' W 30'-40'
QUA	3	Quaking Aspen	Populus tremuloides	2" BB	AS SHOWN	H 25-40' W 20'-30'
ORNAMENTAL TREES		3				
ALS	3	Serviceberry	Amelanchier	2" BB	AS SHOWN	H 15-25' W 15'-25'

GENERAL NOTE

HOUSES AND DRIVEWAYS SHOWN ARE FOR SCHEMATIC PURPOSES AND MAY ADJUST BASED ON FINAL HOUSE OPTION CHOSEN FOR THE LOT

WARNING:

THE CONTRACTOR SHALL BE RESPONSIBLE FOR CALLING FOR LOCATIONS OF ALL EXISTING UTILITIES. THEY SHALL COOPERATE WITH ALL UTILITY COMPANIES IN MAINTAINING THEIR SERVICE AND/OR RELOCATION OF LINES.

THE CONTRACTOR SHALL CONTACT GOPHER STATE ONE CALL AT 651-454-0002 AT LEAST 48 HOURS IN ADVANCE FOR THE LOCATIONS OF ALL UNDERGROUND WIRES, CABLES, CONDUITS, PIPES, MANHOLES, VALVES OR OTHER BURIED STRUCTURES BEFORE DIGGING. THE CONTRACTOR SHALL REPAIR OR REPLACE THE ABOVE WHEN DAMAGED DURING CONSTRUCTION AT NO COST TO THE OWNER.

CALL BEFORE YOU DIG

GOPHER STATE ONE CALL

TWIN CITY AREA: 651-454-0002
TOLL FREE 1-800-252-1166

LANDSCAPE REQUIREMENTS

SEC 10-73-04.C.1.A MINIMUM PLANTING REQUIREMENTS - NOTES

1. SINGLE- AND TWO-UNIT RESIDENTIAL. ALL NEW SINGLE- OR TWO-UNIT UNITS SHALL FOLLOW THE SODDING AND GROUND COVER REQUIREMENTS FOUND IN ITEM D (10-73.D), AND SHALL PLANT A MINIMUM OF TWO (2) DECIDUOUS TREES PER DWELLING UNIT, OF WHICH A MINIMUM OF ONE (1) IN TOTAL SHALL BE PLACED IN THE FRONT YARD.

SEC 10-73-04.D SODDING AND GROUND COVER

1. ALL OPEN AREAS OF THE SITE NOT OCCUPIED BY BUILDING, PAVEMENT, PONDING, OR LANDSCAPING PLANTING SHALL BE EITHER SEEDED OR SODDED.
2. THE PROPERTY OWNER SHALL ASSURE THAT THE FRONT, SIDE, AND REAR YARDS OF EACH LOT ARE PROPERLY GRADED TO ALLOW FOR PROPER DRAINAGE AND MAINTENANCE. FOUR (4) INCHES OF TOP SOIL SHALL BE UNIFORMLY ADDED. SOD SHALL BE LAID TO COMPLETE THE FRONT YARD (INCLUDING RIGHT-OF-WAY), AND SEEDING OR SODDING HAS BEEN ADDED TO THE REMAINDER OF THE DISTURBED AREA OF THE LOT. SEEDING MUST EITHER BE PROTECTED WITH A HYDRO-MULCH BINDER OR BIODEGRADABLE RESTORATION BLANKETING. SEEDING WILL BE ALLOWED IN THE FRONT YARD ONLY IF A SPRINKLER SYSTEM IS ALSO INSTALLED.

PROJECT MINIMUM PLANTING CALCULATIONS

7 SINGLE-UNIT RESIDENCES X 2 DECIDUOUS TREES PER UNIT = 14 NEW DECIDUOUS TREES

CITY OF ST. FRANCIS DESIGN STANDARDS AND CRITERIA

1. ALL BUILDINGS SHALL HAVE AT LEAST ONE (1) EXTERIOR WATER SPIGOT PER 2,000 SQUARE FOOT OF BUILDING FOUNDATION OR AN IRRIGATION SYSTEM TO ENSURE THAT LANDSCAPE MAINTENANCE CAN BE ACCOMPLISHED. NON-RESIDENTIAL DEVELOPMENTS WITH A BUILDING FOOTPRINT OF MORE THAN 7,500 SQUARE FEET AND RESIDENTIAL DEVELOPMENTS (EXCLUDING SINGLE UNIT HOMES) WITH A BUILDING FOOTPRINT OF MORE THAN 4,000 SQUARE FEET ARE REQUIRED TO HAVE AN IRRIGATION SYSTEM.

CITY OF ST. FRANCIS PLANTING NOTES

1. PRIOR TO TREE STAKING AND PLANTING OPERATIONS CONTRACTOR MUST CONTACT GOPHER STATE ONE CALL (WWW.GOPHERSTATEONECALL.COM OR 811) TO VERIFY UNDERGROUD UTILITIES. WHERE PRIVATE UTILITIES EXIST ON-SITE THE CONTRACTOR IS REQUIRED TO HAVE THOSE LOCATED AS WELL.
2. PLANT MATERIALS SHALL MEET AMERICAN STANDARDS FOR NURSERY STOCK: ANSI Z60.1 LATEST EDITION. HTTP://AMERICANHORT.ORG/DOCUMENTS/ANSI NURSERY STOCK STANDARDS AMERICANHORT 2014.PDF
3. NO PLANT SUBSTITUTIONS SHALL BE MADE WITHOUT THE PRIOR WRITTEN AUTHORIZATION FROM THE CITY.
4. ALL TREE PROTECTION MEASURES TO BE FIELD STAKED PRIOR TO INSTALLATION. CONTRACTOR TO COORDINATE FIELD REVIEW OF PROPOSED TREE PROTECTION LOCATIONS WITH THE CITY AND PROJECT LANDSCAPE ARCHITECT PRIOR TO ANY TREE PROTECTION INSTALLATION.
5. ALL TREE LOCATIONS TO BE FIELD STAKED PRIOR TO INSTALLATION. CONTRACTOR TO COORDINATE FIELD REVIEW OF PROPOSED TREE LOCATIONS WITH THE CITY AND PROJECT LANDSCAPE ARCHITECT PRIOR TO ANY TREE INSTALLATION.
6. ALL PLANTS SHALL BE PLANTED IMMEDIATELY UPON ARRIVAL TO PROJECT SITE. NO PLANT MATERIAL IS TO BE LEFT OVERNIGHT ON THE PROJECT SITE WITHOUT BEING INSTALLED UNLESS WRITTEN APPROVAL BY CITY.
7. TREES AND SHRUBS SHALL NOT BE PLANTED IN THE RIGHT- OF-WAY EXCEPT AS APPROVED BY THE CITY COUNCIL
12. ALL PLANTS REQUIRED AS PART OF AN APPROVED LANDSCAPING PLAN SHALL BE MAINTAINED AND KEPT ALIVE AND IN A HEALTHY CONDITION. DEAD PLANTS SHALL BE REPLACED IN KIND AND IN ACCORDANCE WITH THE APPROVED LANDSCAPE PLAN PROVIDED SITE AND ENVIRONMENTAL CONDITIONS ARE NOT PROHIBITIVE
13. ALL NEW PLANTS SHALL BE GUARANTEED FOR TWELVE (12) MOTHS FROM THE TIME ALL PLANTING HAS BEEN COMPLETED AND A CERTIFICATE OF OCCUPANCY HAS BEEN ISSUED. ALL PLANTS SHALL BE ALIVE, OF GOOD QUALITY, WITH NO SIGNS OF STRESS, AND DISEASE FREE AT THE END OF THE WARRANTY PERIOD OR THEY SHALL BE REPLACED. ANY REPLACEMENTS SHALL BE WARRANTED FOR 12 MONTHS FROM THE TIME OF REPLACEMENT.
14. ALL AREAS DISTURBED ADJACENT TO THE PROJECT SITE INCLUDING BOULEVARDS SHALL BE REPAIRED AND MAINTAINED PER CITY DIRECTION.
15. PROVIDED A THREE YEAR MAINTENANCE PLAN FOR ALL SEEDING OF PLANT MATERIALS/AREAS WITHIN ALL COMMERCIAL PROPERTIES, COMMONLY HELD HOA AREAS, CITY OUTLOTS AND R.O.W AREAS.

PLANT LEGEND

SERVICEBERRY TREE

IRONWOOD TREE

BIRCH TREE

ASPEN TREE

GROUND COVER LEGEND

GRADING LIMITS

DENOTES MNDOT LOW MAINTENANCE TURF (25-131) SOD. TOTAL AREA (0.45 AC)

DENOTES MNDOT WET PRAIRIE (34-262) SEED MIX. TOTAL AREA (0.2 AC)

DENOTES MNDOT MESIC PRAIRIE GENERAL (35-241) SEED MIX. TOTAL AREA (0.15 AC)

1. SEEDING WILL BE ALLOWED IN THE FRONT YARD ONLY IF A SPRINKLER SYSTEM IS ALSO INSTALLED.
2. THE SUGGESTED SEEDING RATE FOR MNDOT LOW MAINTENANCE TURF (25-131) IS 220 LB/AC.
3. THE SUGGESTED SEEDING RATE FOR MNDOT WET PRAIRIE (34-262) IS 14.5 LB/AC.
4. THE SUGGESTED SEEDING RATE FOR MNDOT MESIC PRAIRIE GENERAL (35-241) IS 36.5 LB/AC.
5. PLEASE REFER TO THE MNDOT SEEDING MANUAL FOR SEEDING BED PREPARATION, METHOD AND APPLICATION RATE.
6. ALL TEMPORARILY DISTURBED AREAS TO BE SEEDED WITH MNDOT LOW MAINTENANCE TURF (25-131) UNLESS NOTED OTHERWISE.

PRESERVATION LEGEND

EXISTING DECIDUOUS TREE TO REMAIN

EXISTING CONIFEROUS TREE TO REMAIN

MIDWEST WETLAND improvements
P.O. BOX 448
VICTORIA, MN 55386
PHONE: (952) 261-9990
WWW.MIDWESTWETLANDS.COM

CERTIFICATION:

I HEREBY CERTIFY THAT THIS PLAN, SPECIFICATION, OR REPORT WAS PREPARED BY ME OR UNDER MY DIRECT SUPERVISION AND THAT I AM A DULY LICENSED LANDSCAPE ARCHITECT UNDER THE LAWS OF THE STATE OF MINNESOTA.

LUCIUS JONETT

LICENSE NO.: 52856

DATE: 05/17/2023

SUB CONSULTANT:

DATE:	DESCRIPTION:	ISSUE NO.:
01/18/2023	PRELIMINARY SUBMITTAL	0
03/16/2023	SINGLE FAMILY LAYOUT REVISION	1
04/27/2023	REVISIONS PER CITY COMMENT	2
05/17/2023	REVISIONS PER CITY COMMENT	3

PROJECT TITLE:

TURTLE PONDS 6TH ADDITION

ST. FRANCIS, MN

CLIENT:

JOHNSON ENGINEERING GROUP
PO BOX 384
WINDOM, MN 56101
PHONE: 507-822-1735
WWW.JOHNSONENGRP.COM

PROJECT NO.:		0021-01
DWN BY: PAG	CHK'D BY: LNJ	APP'D BY: LNJ
ISSUE DATE:		05-17-2023
ISSUE NO.:		3

SHEET TITLE:

LANDSCAPE PLAN

SHEET NO.:

L-102

5/18/2023 9:34:12 AM
C:\Users\PaytonGoing\Midwest Wetland Improvements, LLC\Midwest Wetlands - OneDrive - MWI\Projects\0021 JEG\0001 - Turtle Ponds 6th Addition\5_DESIGN\1_CAD\3 PLANSHEETS\0021-01 L-102 Landscape Plan 05-17.dwg

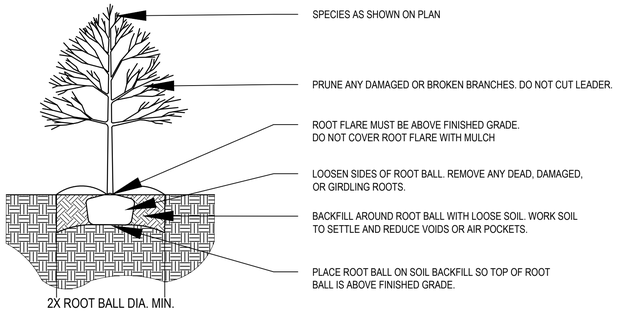

1 L-103 DECIDUOUS TREE PLANTING DETAIL
NOT TO SCALE

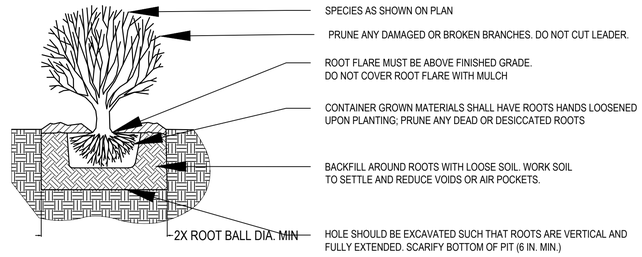

2 L-103 SHRUB & CONTAINER PLANTING DETAIL
NOT TO SCALE

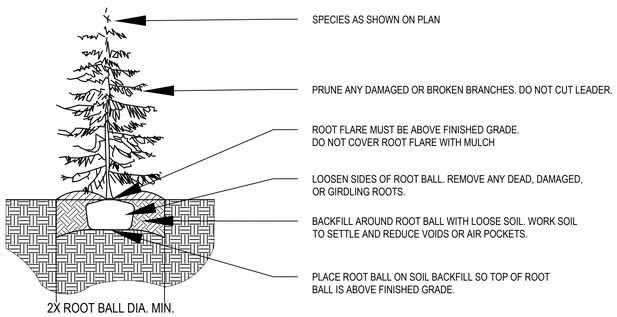

3 L-103 CONIFEROUS TREE PLANTING DETAIL
NOT TO SCALE

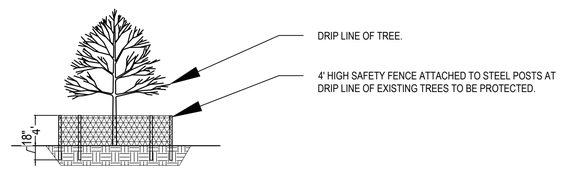

4 L-103 TREE PROTECTION FENCE DETAIL
NOT TO SCALE

MIDWEST WETLAND improvements
P.O. BOX 448
VICTORIA, MN 55386
PHONE: (952) 261-9990
WWW.MIDWESTWETLANDS.COM

CERTIFICATION:

I HEREBY CERTIFY THAT THIS PLAN, SPECIFICATION, OR REPORT WAS PREPARED BY ME OR UNDER MY DIRECT SUPERVISION AND THAT I AM A DULY LICENSED LANDSCAPE ARCHITECT UNDER THE LAWS OF THE STATE OF MINNESOTA.

LUCIUS JONETT

LICENSE NO.: 52856

DATE: 05/17/2023

SUB CONSULTANT:

ISSUE NO.:	DESCRIPTION:	DATE:
0	PRELIMINARY SUBMITTAL	01/18/2023
1	SINGLE FAMILY LAYOUT REVISION	03/16/2023
2	REVISIONS PER CITY COMMENT	04/27/2023
3	REVISIONS PER CITY COMMENT	05/17/2023

PROJECT TITLE:

TURTLE PONDS
6TH ADDITION
ST. FRANCIS, MN

CLIENT:

JOHNSON ENGINEERING GROUP
PO BOX 384
WINDOM, MN 56101
PHONE: 507-822-1735
WWW.JOHNSONENGRP.COM

PROJECT NO.: 0021-01

DWN BY:	CHK'D BY:	APP'D BY:
PAG	LNJ	LNJ

ISSUE DATE: 05-17-2023

ISSUE NO.: 3

SHEET TITLE:

LANDSCAPE DETAILS

SHEET NO.:

L-103

5/18/2023 8:40:28 AM
C:\Users\PaytonGing\Midwest Wetland Improvements, LLC\Midwest Wetlands - OneDrive - MWI\Projects\0021 JEG\001 - Turtle Ponds 6th Addition\5_DESIGN\1_CAD\3 PLANSHEETS\0021-01 L-103 Landscape Details (05-17.dwg